Acuvim-L Multifunction Power and Energy Meter

Users Manual

ACCUENERGY

Distributed by MicroDAQ, LLC
(603) 746-5524
www.microdaq.com

Copyright © 2023 V: 4.00

This manual may not be altered or reproduced in whole or in part by any means without the expressed written consent of Accuenergy.

The information contained in this document is believed to be accurate at the time of publication, however, Accuenergy assumes no responsibility for any errors which may appear here and reserves the right to make changes without notice. Please ask the local representative for latest product specifications before ordering.

Please read this manual carefully before installation, operation, and maintenance of Acuvim-L power meter.

The following symbols in this manual and on Acuvim-L series meters are used to provide warning of danger or risk during the installation and operation of the meters.

Electric Shock Symbol: Carries information about procedures which must be followed to reduce the risk of electric shock and danger to personal health.

Safety Alert Symbol: Carries information about circumstances which if not considered may result in injury or death.

This mark indicates that this product is UL Listed.

Installation and maintenance of the Acuvim-L power meter should only be performed by qualified, competent professionals who have received training and experience with high voltage and current devices.

Accuenergy shall not be responsible or liable for any damages caused by improper meter installation and/or operation.

Distributed by MicroDAQ, LLC
(603) 746-5524
www.microdaq.com

Congratulations!

You have purchased an advanced, versatile, multifunction power meter. This meter can work as a remote terminal unit (RTU) that contributes to your system's stability and reliability by providing real-time power quality monitoring and analysis. When you open the package, you will find the following items:

1.	**Acuvim-L power meter**	**qty: 1**
2.	**Terminal Blocks**	**qty: 3 (2 for basic model)**
3.	**Installation Clips**	**qty: 4**
4.	**Additional documentation:** **a. Quick Setup Guide,** **b. Calibration Certificate**	**qty: 2**

To avoid complications, please read this manual carefully before installation and operation of the Acuvim L series meter.

Table of Contents

Chapter 1: Introduction 6

1.1 Meter Overview 6
1.2 Areas of Application 7
1.3 Functionality 7

Chapter 2: Installation 12

2.1 Appearance and Dimensions 13
2.2 Installation Methods 15
2.3 Wiring 20
2.3.1 Power Requirement 21
2.3.2 Voltage Input Wiring 22
2.3.3 Current Input Wiring 25
2.3.4 Typical Wiring 30
2.3.5 Frequently Used Wiring Methods 30
2.3.6 Communication 38

Chapter 3: Basic Operations and Applications 40

3.1 Display Panel and Keys 40
3.2.1 Voltage and Current Data 42
3.2.2 Power, Power Factor, and Frequency 44
3.2.3 Phase Angles and Unbalance 45
3.2.4 Energy 47
3.2.5 TOU Display 49
3.2.6 Load Time 49
3.2.7 Dual Source 50
3.3 Statistical Data 51
3.4 Demand Display 53
3.5 Harmonics Data 54
3.5.1 Power Quality Data 54
3.5.2 Individual Harmonic Data 55
3.6 Expanded I/O Module Data 56
3.6.1 Module Selection: 56
3.7 Meter Setting Mode 58
3.7.1 Password Inquiry 59
3.7.2 Parameter Selection Mode 59
3.7.3 System Settings 60
3.7.4 I/O Module Settings 63
3.7.5 Communications Module Settings 65
3.7.6 Alarm Settings 67
3.8 Page Recovery Function 68

Chapter 4: Detailed Functions and Software 69

4.1 Acuview 2 Software 69
4.1.1 Connecting using RS485 69
4.2 Real-time Analog Measurements 71

Distributed by MicroDAQ, LLC
(603) 746-5524
www.microdaq.com

4.2.1 High Speed Metering 72
4.3 Demand 72
4.4 Energy 73
4.5 Max/Min 74
4.6 Harmonics and Power Quality Analysis 74
4.6.1 Harmonics & THD 74
4.6.2 Amplitude and Angle 75
4.6.3 Phase Angles 76
4.6.4 Sequence Component and Unbalance Analysis 77
4.7 Alarm 78
4.7.1 Alarm Log 81
4.8 Meter Settings 82
4.8.1 Communication 82
4.8.2 Wiring, CT/PT Ratios 83
4.8.3 Demand Settings 84
4.8.4 Energy Reading & Power Factor Settings 84
4.8.5 Load Percentage 84
4.9 Time & Date Configuration 85
4.10 Data Logging 86
4.10.1. Data Log Setting 86
4.10.2 Retrieving the Data Log 88
4.11 Time-of-Use (TOU) 89
4.11.1 General TOU Setting 89
4.11.2 Billing & Tariff Setting 91
4.11.3 TOU Year Schedule 91
4.11.4 TOU Schedule 92
4.11.5 TOU Weekend Schedule 93
4.11.6 Holiday Settings 94
4.11.7 Ten Years Holiday Settings 95
4.11.8 DST Settings 97
4.11.9 Reading the TOU data 97
4.12 Power Quality Event Logging Configuration 99
4.12.1 Power Quality Event Configuration 100
4.12.2 Power Quality Event Logging 100
4.13 Dual Source Energy 101
4.13.1 Controlling the Energy Direction 102
4.13.2 Bi-Directional Energy Switching Record 102
4.14 Seal Function 103
4.14.1 Sealed Nonstandard Parameters 104
4.15 Phase Selection 107
4.16 Independent Channel 108
4.16.1 Independent Channel Configuration 108
4.16.2 Independent Channel Reading 110

Chapter 5: Extended Modules 112

5.1 I/O Modules 112
5.1.1 Appearance and Dimensions 112

Distributed by MicroDAQ, LLC
(603) 746-5524
www.microdaq.com

5.1.2 I/O Functionality 113
5.1.3 Installation Method 115
5.1.4 I/O Module Wiring 116
5.1.5 Detection of Remote Signals 120
5.1.6 Pulse Counter 123
5.1.7 Relay Output 125
5.1.8 Digital Output 126
5.1.9 Analog Output 129
5.1.10 Analog Input 132
5.2 Profibus Module AXM-PROFI 134
5.2.1 Introduction of PROFIBUS Technology 134
5.2.2 PROFIBUS module application notes 134
5.2.3 Appearance and Dimensions 135
5.2.4 Installation Method 135
5.2.5 Definition of DP Interface 135
5.2.6 Cable 136
5.2.7 Bus Terminal 136
5.2.8 Address Setting 136
5.2.9 Baud Rate 137
5.2.10 GSD Files 137
5.2.11 Information Exchange 137
5.2.12 Format of Function code 01H 138
5.2.13 Format of function code 05H 138
5.2.14 Format of function code 02H 139
5.2.15 Format of function code 03H 140
5.2.16 Format of function code 10H 141
5.2.17 32 Word Output Interface 142
5.3.1 Communication Parameters Setting 143
5.3.2 Function Description of RS485 module 143
5.3.4 Installation Method 144
5.3.5 Connection Method 144
5.3.6 Communication Address 145

Chapter 6: Communication Part I 146

6.1 Modbus Protocol Introduction 146
6.2 Communication Format 147
6.3 Data Address Table and Application Details 150
6.3.1 Data Type 150
6.3.2 Relationship Between Communication Value and Numerical Value. 150
6.3.3 System Parameter Setting 151
6.3.4 System Status Parameters 154
6.3.5 Date and Time Registers 156
6.3.6 100ms Real-Time Metering Parameters 157
6.3.7 Real-Time Metering Parameters 158
6.3.8 Energy Parameters 160
6.3.9 TOU (Time of Use) Registers 162

Distributed by MicroDAQ, LLC
(603) 746-5524
www.microdaq.com

6.3.10 Power Quality Parameters 174
6.3.11 Max & Min Values 185
6.3.13 Sequence Component 188
6.3.14 I/O Module Settings 189
6.3.15 I/O Module Readings Settings 196
6.3.16 SunSpec Registers 200

Chapter 6: Communication Part II 203

6.3.17 Over/Under Alarm Setting 203
6.3.18 Data Logging 213
6.3.19 Time-of-Use 218
6.3.20 Wave Form 237
6.3.21 Phase Selection 241
6.3.22 Independent Channel 241
6.4 BACnet Protocol 243
6.4.1 BACnet Overview and Introduction 243
6.4.3 BACnet MS/TP Communication 244
6.4.4 BACnet IP Communication 246
6.4.5 Acuvim-L Series Power Meter's BACnet Objects 247

Appendix 250

Appendix A Technical Data and Specification 250
Appendix B Ordering Information 253

Distributed by MicroDAQ, LLC
(603) 746-5524
www.microdaq.com

Chapter 1: Introduction

1.1 Meter Overview

Powerful Multifunction Power and Energy Meter

The Acuvim-L series multi-function digital power meter is designed using modern MCU (microcontroller unit) and DSP (digital signal processing) technology. It integrates three-phase energy measurements and display, energy accumulation, power quality analysis, malfunction alarm, data logging, and network communication. A vivid LCD display with large characters and a time-of-use programmable backlight provides a clear real-time data readout.

Ideal for Electric Automation SCADA Systems

The Acuvim-L series meter is the superior choice when upgrading from traditional analog electric meters. In addition to providing clear real-time readings on the meter front display, it can also be used as a remote terminal unit (RTU) to monitor and control for a SCADA system. Users can access all measurement parameters via the standard RS485 communication port (or the optional Ethernet port) with the Modbus protocol.

Energy Management

The Acuvim-L series meter can measure bidirectional energy as well as four quadrant energy (kWh) and reactive energy (kvarh). It provides maximum/minimum records for power usage and power demand parameters. All power and energy parameters can be viewed remotely via software to easily monitor various parameters. In addition, measurement tables can be viewed from the free Acuview software.

Remote Power Control

This meter is designed for measuring and monitoring power quality parameters. There are a wide selection of optional communication and I/O modules that can be added to the meter. This expands the meter's operational capabilities and provides a very flexible solution as a distributed RTU for metering, monitoring, and remote controlling, all in one unit.

Power Quality Analysis

Acuvim-L series meter utilizes digital signal processing (DSP) technology to provide high accuracy power quality analysis and supports remote monitoring via the Ethernet module. The meter continuously updates metering measurements and allows users to access the meter online to monitor parameters such as voltage and current THD, harmonics, voltage crest factor, current K factor, and voltage and current unbalance factor along with other parameters.

Data Logging

The Acuvim-CL/EL meter contains 8MB (megabytes) of on-board memory for data logging and historical trending analysis. The meter contains a real-time clock to record all events as logged data and will include a timestamp of when data is recorded.

Time of use (TOU)

Users can assign up to four different tariffs (sharp, peak, valley and normal) to different time periods within a day according to the billing requirements. The meter will calculate and accumulate energy to different tariff modes according to the meter's internal clock and TOU settings.

Power Quality Event Logging

When a power quality event occurs, such as voltage sag and swell, Acuvim-EL will record the timestamp and the trigger condition of the event. It can save up to 50,000 power quality events.

Distributed by MicroDAQ, LLC
(603) 746-5524
www.microdaq.com

1.2 Areas of Application

Acuvim-L series can be used as front-end power automation system Acquisition Terminal for remote data acquisition and control. It can also be used as a multifunction power measuring instrument in a power distribution system or a wide range of other applications. The Acuvim-L uses advanced true RMS measuring and digital signal processing technology for accurate power quality monitoring of non-linear loads, even in harsh environments.

- Power Distribution Automation
- Electric Switch Gear and Control Panels
- Industry Automation
- Building Automation
- Energy Management Systems
- Marine Applications
- Renewable Energy

1.3 Functionality

Multifunction

Acuvim-L meters provide powerful data collecting and processing functions. In addition to measuring various parameters, the meter can perform demand metering, harmonic analysis, max/min statistic recording, over/under limit alarm, energy accumulation, and data logging.

High Accuracy Measurement

Accuracy of Voltage and Current is 0.1%, True-RMS.
Accuracy of Power and Energy is 0.2% for model EL. And 0.5% for model CL, while monitoring all four quadrants.

Compact and Easy to Install

This meter can be installed into a standard ANSI C39.1 (4" Round) or an IEC 92mm DIN (Square) cut out. With a depth of 51mm after mounting, the Acuvim-L series meter can be installed in a small cabinet. Mounting clips are used for easy installation and removal.

Easy to Use

All metering data and setting parameters can be accessed by using the front panel keys or the communication port. Setting parameters are stored in the EEPROM (Electrical Erasable Programmable Read-Only Memory) to preserve content configuration when the meter is powered off.

Multiple Wiring Modes

The Acuvim-L series meter can be used in high voltage, low voltage, three-phase three wires, three-phase four wires and single-phase systems using different wiring mode settings.

High Safety, High Reliability

Acuvim-L series meter was designed according to industrial standards. It can run reliably under high power disturbance conditions. This meter has been fully tested for EMC and safety compliance in accordance with UL and IEC standards.

Function Comparison of Acuvim-L series Meters

The Acuvim-L series has two standard models: Acuvim-CL (basic model + communication + extension) and Acuvim- EL (sharing power + communication + extension). Please see table 1-1 for their functionalities and details.

Distributed by MicroDAQ, LLC
(603) 746-5524
www.microdaq.com

Table 1-1 Functions of Acuvim-L Series

Function		Parameters	Acuvim-CL	Acuvim-EL
Real Time Measuring	Phase Voltage	V1, V2, V3, VInavg	•	•
	Line Voltage	V12, V23, V31, VIIavg	•	•
	Current	I1, I2, I3, In, Iavg, Itotal	•	•
	Power	P1, P2, P3, Psum	•	•
	Reactive Power	Q1, Q2, Q3, Qsum	•	•
	Apparent Power	S1, S2, S3, Ssum	•	•
	Power Factor	PF1, PF2, PF3, PF	•	•
	Frequency	F	•	•
	Load Features	L/C/R	•	•
	Four Quadrant Powers	Four Quadrant Powers	•	•
Independent channel	System Phase Voltage	V1, V2, V3, VInavg	•	•
	System Line Voltage	V12, V23, V31, VIIavg	•	•
	System Frequency	F	•	•
	Current	Ichannel1, Ichannel2, Ichannel3, Ichannel4, Isum_1avg, Isum_2avg	•	•
	Power	Pchannel1, Pchannel2, Pchannel3, Pchannel4, Psum_1, Psum_2	•	•
	Reactive Power	Qchannel1, Qchannel2, Qchannel3, Qchannel4, Qsum_1, Qsum_2	•	•
	Apparent Power	Schannel1, Schannel2, Schannel3, Schannel4, Ssum_1, Ssum_2	•	•
	Power Factor	PFchannel1, PFchannel2, PFchannel3, PFchannel4, PFsum_1, PFsum_2	•	•
	Load Features	Load Features	•	•
	Four Quadrant Powers	Four Quadrant Powers	•	•
	Energy	Epchannel1_imp, Epchannel2_imp, Epchannel3_imp, Epchannel4_imp, Epchannel1_exp, Epchannel2_exp, Epchannel3_exp, Epchannel4_exp, Epsum1_imp, Epsum2_imp, Epsum1_exp, Epsum2_exp, Epsum1_Totoal, Epsum2_Total, Epsum1_Net, Epsum2_Net	•	•
	Reactive Energy	Eqchannel1_imp, Eqchannel2_imp, Eqchannel3_imp, Eqchannel4_imp, Eqchannel1_exp, Eqchannel2_exp, Eqchannel3_exp, Eqchannel4_exp, Eqsum1_imp, Eqsum2_imp, Eqsum1_exp, Eqsum2_exp, Eqsum1_Totoal, Eqsum2_Total, Eqsum1_Net, Eqsum2_Net	•	•
	Apparent Energy	Eschannel1, Eschannel2, Eschannel3, Eschannel4, Essum1, Essum2	•	•
	Demand	Dmd_Pchannel1, Dmd_Pchannel2, Dmd_Pchannel3, Dmd_Pchannel4, Dmd_Qchannel1, Dmd_Qchannel2, Dmd_Qchannel3, Dmd_Qchannel4, Dmd_Schannel1, Dmd_Schannel2, Dmd_Schannel3, Dmd_Schannel4, Dmd_Psum1, Dmd_Psum2, Dmd_Qsum1, Dmd_Qsum2, Dmd_Ssum1, Dmd_Ssum2, Dmd_Ichannel1, Dmd_Ichannel2, Dmd_Ichannel3, Dmd_Ichannel4	•	•

Distributed by MicroDAQ, LLC
(603) 746-5524
www.microdaq.com

Function		Parameters	Acuvim-CL	Acuvim-EL
Energy	Active Energy	Ep_imp, Ep_exp, Ep_total, Ep_net , Epa_imp, Epa_exp, Epb_imp, Epb_exp, Epc_imp, Epc_exp, Ep_q1, Ep_q2, Ep_q3, Ep_q4	•	•
	Reactive Energy	Eq_imp, Eq_exp, Eq_total, Eq_net, Eqa_imp, Eqa_exp, Eqb_imp, Eqb_exp, Eqc_imp, Eqc_exp	•	•
	Apparent Energy	Es_imp, Es_exp, Es_total, Es_net, Esa, Esb, Esc, Es_q1, Es_q2, Es_q3, Es_q4	•	•
Dual Source Energy	Energy to Generator	Energy1_Generator, Energy2_Generator, Energy3_Generator	•	•
	Energy to Grid	Energy1_Grid, Energy2_ Grid, Energy3_Grid	•	•
Demand	Current Demand	Dmd_I1, Dmd_I2, Dmd_I3, Dmd_ In	•	•
	Power Demand	Dmd_Psum, Dmd_Qsum, Dmd_ Ssum	•	•
Time	Real Time Clock	Year, Month, Day, Hour, Minute, Second	•	•
Hour	Meter Running Time	Hour	•	•
	Load Running Time	Hour	•	•
Power Quality	Voltage Unbalance	U_unbl	•	•
	Current Unbalance	I_unbl	•	•
	Voltage THD	THD_V1, THD_V2, THD_V3, THD_Vavg	•	•
	Current THD	THD_I1, THD_I2, THD_I3, THD_Iavg	•	•
	Individual Harmonics	Harmonics 2nd to 31st	•	
		Harmonics 2nd to 63rd		•
	Voltage Crest Factor	Crest Factor	•	•
	TIF	THFF	•	•
	Current K Factor	K Factor	•	•
Sequence	Voltage/Current Sequence	Positive Sequence, Negative Sequence, Zero Sequence	•	•
Phase Angles	Voltage/Current Phase Angles	Voltage Phase Angle, Current Phase Angle	•	•
Statistics	MAX with Time Stamp, MIN with Time Stamp	Each Phase of V & I Total of P, Q, S, PF & F Demand of I1, I2, I3, IN, P, Q, & S Each Phase THD of V & I Unbalance Factor of V & I	•	•

Distributed by MicroDAQ, LLC
(603) 746-5524
www.microdaq.com

Function		Parameters	Acuvim-CL	Acuvim-EL
Alarm	Over/Under Limit Alarm	V, I, P, Q, S, PF, V_THD & I_THD Each Phase and Total/ Average Unbalance Factor of V& I Load Type Analog and Digital Input of Each Channel Demand of I1, I2, I3, P, Q & S Reverse Phase Sequence	•	•
Power Quality Event Logging	Power Quality Event with Time Stamp	Voltage SAG and fail, Current overflow, Phase Sequence Error		•
Data Logging	Data Logging 1 Data Logging 2 Data Logging 3 Data Logging 4	Frequency V1, V2, V3, VInavg V12, V23, V31, VIIavg I1, I2, I3, In, Iavg P1, P2, P3, Psum Q1, Q2, Q3, Qsum S1, S2, S3, Ssum Ep_imp, Ep_exp, Ep_total, Ep_net, Eq_imp, Eq_exp, Eq_total, Eq_net, Es_imp, Es_exp, Es_total, Es_net Epa_imp, Epa_exp, Epb_imp, Epb_exp, Epc_imp, Epc_exp Eqa_imp, Eqa_exp, Eqb_imp, Eqb_exp, Eqc_imp, Eqc_exp Esa_imp, Esa_exp, Esb_imp, Esb_exp, Esc_imp, Esc_exp PF1, PF2, PF3, PF U_unbl, I_unbl Load Type THD_V1, THD_V2, THD_V3, THD_Vavg THD_I1, THD_I2, THD_I3, THD_Iavg Harmonics 2nd to 63rd, Crest Factor, THFF, K Factor Sequence, phase angles DI counter, AI, AO Dmd P, Dmd Q, Dmd S, Dmd_I1, Dmd_I2, Dmd_I3	•	•
Time of Use	Energy/Max Demand	TOU, 4 Tariffs, 12 Seasons, 14 Schedules	•	•
	Daylight Saving Time	Two Adjustable Formats	•	•

Distributed by MicroDAQ, LLC
(603) 746-5524
www.microdaq.com

Function		Parameters	Acuvim-CL	Acuvim-EL
I/O Module	Switch Status (DI)	Digital Input	⊙	⊙
	Power Supply for DI	24V DC	⊙	⊙
	Relay Output (RO)	NO, Form A	⊙	⊙
	Digital Output (DO)	Photo-MOS	⊙	⊙
	Pulse Output (PO)	By Using DO	⊙	⊙
	Analog Input (AI)	0 (4) – 20mA, 0 (1) – 5V	⊙	⊙
	Analog Output (AO)	0 (4) – 20mA, 0 (1) – 5V	⊙	⊙
Communication	RS485 Port, Half Duplex, Optical Isolated	Modbus-RTU/BACnet Protocol	●	●
	Ethernet Module	Modbus-TCP, HTTP, SMTP, SNTP	⊙	⊙
	RS-485 Module	Modbus-RTU Protocol	⊙	⊙
	PROFIBUS Module	PROFIBUS-DP/V0 Protocol	⊙	⊙
Onboard Memory Size	Memory	Bytes	16MB	16MB
Display	LCD or DIN Rail		⊙	⊙
Dimensions	96×96×64.3mm (Opening Size: 92 × 92mm)			

● Functions; ⊙ Option; Blank N/A

Distributed by MicroDAQ, LLC
(603) 746-5524
www.microdaq.com

Chapter 2: Installation

Considerations When Installing Meters

- Installation of the meter must only be performed by qualified personnel, who follows standard safety precautions throughout the installation procedures. Those personnel should have the appropriate training and experience with high voltage electrical devices. Appropriate safety gloves, safety glasses and protective clothing are recommended.
- During normal operation, dangerous voltage may flow through many parts of the meter including the terminals, any connected Current Transformers (CTs) or Potential Transformers (PTs), all I/O modules and its circuits. All primary and secondary circuits can produce lethal voltages and currents. **AVOID** contact with any current carrying surfaces.
- The meter and its I/O output channels are **NOT** designed as primary protection devices and can **NOT** be used in primary circuit protection or in an energy limiting capacity. The meter and its I/O output channels can only be used as a secondary protection. **AVOID** using the meter in situations where failure of the meter may cause injury or death. **AVOID** using the meter for any application where the risk of fire may occur.
- All meter terminals should be made inaccessible after installation.
- Do **NOT** perform a Dielectric (HIPOT) test to any inputs, outputs, or communications terminals. High voltage testing may damage electronic components of the meter.
- Exceeding more than the maximum voltage, the meter and/or its modules can withstand will permanently damage the meter and/or its modules. Please refer to the specifications for all devices before applying voltages.
- When removing the meter for service, use shorting blocks and fuses for voltage leads and power supply to prevent hazardous voltage conditions or damage to CTs. CT grounding is optional.
- Accuenergy recommends to use a dry cloth to wipe the meter.

NOTE: *IF THE EQUIPMENT IS USED IN A MANNER NOT SPECIFIED BY THE MANUFACTURER, THE PROTECTION PROVIDED BY THE EQUIPMENT MAY BE IMPAIRED.*

NOTE: *THERE IS NO REQUIRED PREVENTIVE MAINTENANCE OR INSPECTION NECESSARY FOR SAFETY. HOWEVER, ANY REPAIR OR MAINTENANCE SHOULD BE PERFORMED BY THE FACTORY.*

DISCONNECT DEVICE: The following part is considered the equipment disconnect device.

A SWITCH OR CIRCUIT-BREAKER SHALL BE INCLUDED IN THE INSTALLATION. THE SWITCH SHALL BE IN CLOSE PROXIMITY TO THE EQUIPMENT AND WITHIN EASY REACH OF THE OPERATOR. THE SWITCH SHALL BE MARKED AS THE DISCONNECT DEVICE FOR THE EQUIPMENT.

FCC Compliance Statement (e.g., products subject to Part 15)

This device complies with Part 15 of the FCC Rules. Operation is subject to the following two conditions:

1. This device may not cause harmful interference, and

2. This device must accept any interference received, including interference that may cause undesired operation.

The installation method is introduced in this chapter. Please read this chapter carefully before beginning the installation process.

Distributed by MicroDAQ, LLC
(603) 746-5524
www.microdaq.com

2.1 Appearance and Dimensions

There are two different types of Acuvim-L series meter design, either panel mount with an LCD display or DIN rail mount with no display. The following figures provide the front view, side view, and rear view of the two different Acuvim-L series meters.

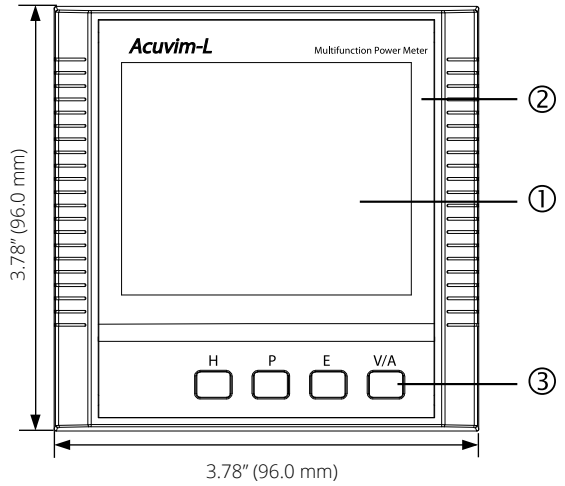

Figure 2-1 Front View of the Meter Display and Remote Display Unit

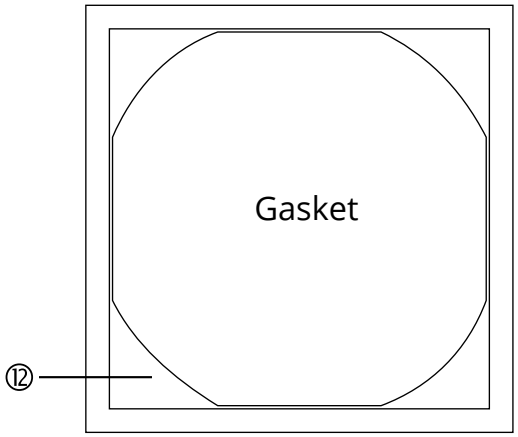

Figure 2-2 Rubber Gasket

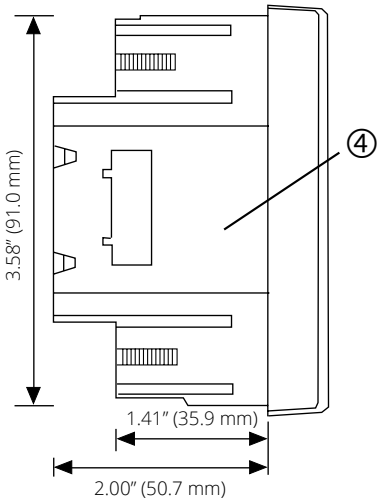

Figure 2-3 Side View of Meter with Display

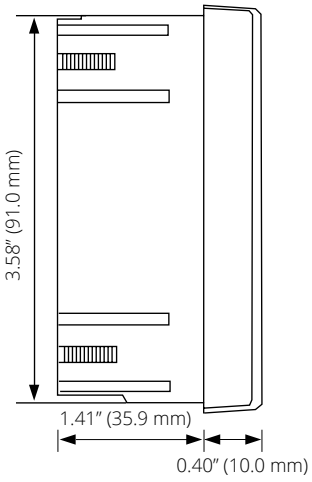

Figure 2-4 Side View of Remote Display Unit

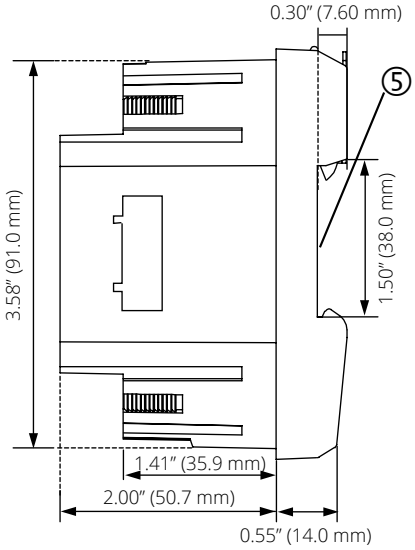

Figure 2-5 Side View of DIN Rail Meter

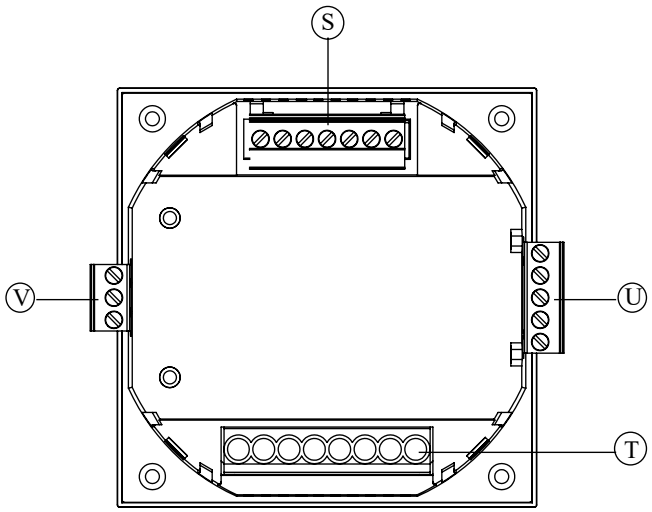

Figure 2-6 Rear View of Acuvim-L Meter

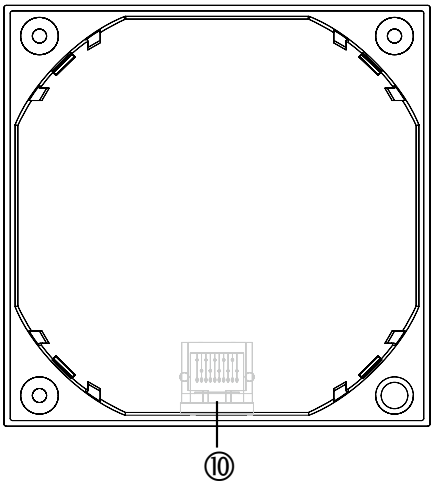

Figure 2-7 Rear View of Remote Display Unit

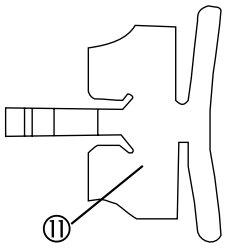

Figure 2-8 Installation Clip

The table below specifies the part name and description of the Acuvim-L series meter.

Table 2-1 Meter part name and description

Part Name	Description
1. LCD Display	Large bright white backlight LCD display.
2. Front Casing	Visible portion (for display and control) after mounting onto a panel.
3. Key	Four keys are used to navigate through the display and configure settings.
4. Enclosure	The Acuvim-L series meter enclosure is made of high strength anti-combustible engineering plastic.
5. DIN rail	Used for installation of 35mm rail of the DIN rail meter.
6. Voltage Input Terminals	Used for voltage input.
7. Current Input Terminals	Used for current input.
8. Power Supply Terminals	The Control Power Input.
9. Communication Terminals	The RS485 communication port on the meter.
10. Interface	Used for connecting the remote display unit to the DIN rail meter.
11. Installation Clip	Used for securing the meter to the panel.
12. Gasket	Rubber gasket inserted between the meter and the cutout to cover up gaps from the round hole.

Distributed by MicroDAQ, LLC
(603) 746-5524
www.microdaq.com

Optional I/O module appearance and mechanical dimensions:

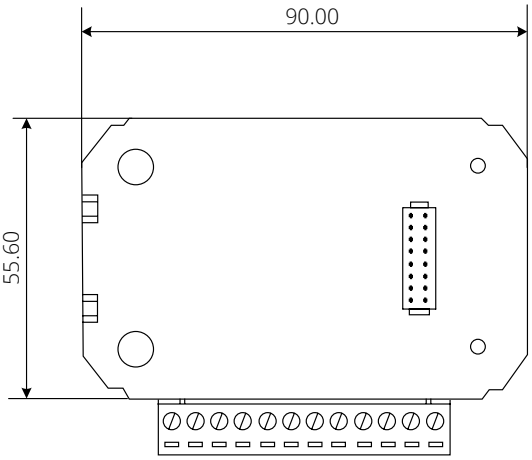

Figure 2-9 Structure Configuration of I/O Modules

PROFIBUS module appearance and mechanical dimensions:

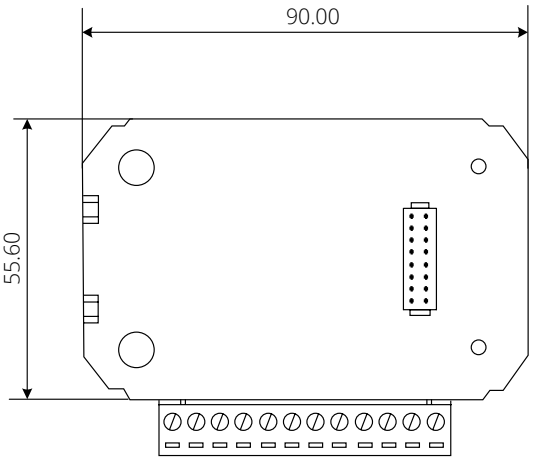

Figure 2-10 Structure Configuration of PROFIBUS Modules

2.2 Installation Methods

Environmental

NOTE: *Temperature and humidity of the environment must be in accordance with the requirements of the Acuvim-L. Operating the meter outside the specified environmental range may cause irreparable damage to the meter.*

Before installation, please check the environment, temperature, and humidity according to Acuvim-L series meter's specifications to ensure the power meter will properly operate.

Environment

The Acuvim-L series meter should be installed in a dry and dust-free environment. Avoid exposing the meter to excessive heat, radiation, or high electrical noise source.

Temperature

- Operation: -25°C to 70°C
- Storage: -40°C to 85°C

Humidity

- 5% to 95% non-condensing

Installation Steps

The Acuvim-L series meter can be installed into a standard ANSI C39.1 (4-inch round) or an IEC 92mm DIN (square) form.

Panel Mount Installation

1. Cut a square hole or round hole on the panel of the switch gear. The cutting size can be seen in Figure 2-11.

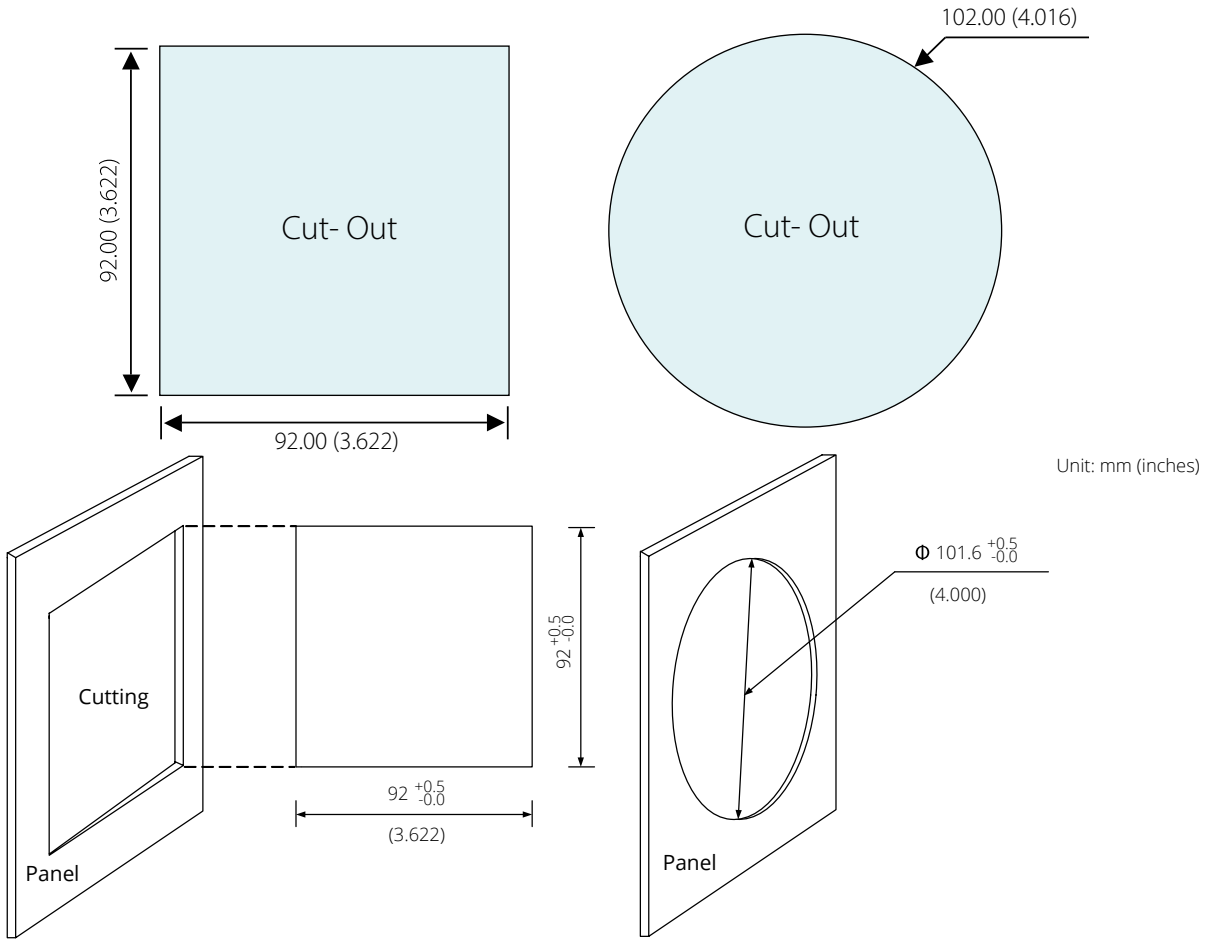

Figure 2-11 Panel Cutout

2. Remove the clips from the meter and insert the meter into the square hole from the front side.

NOTE: *Optional rubber gasket must be installed on the meter before inserting the meter into the cutout. The rubber gasket is placed between the meter and cutout.*

Distributed by MicroDAQ, LLC
(603) 746-5524
www.microdaq.com

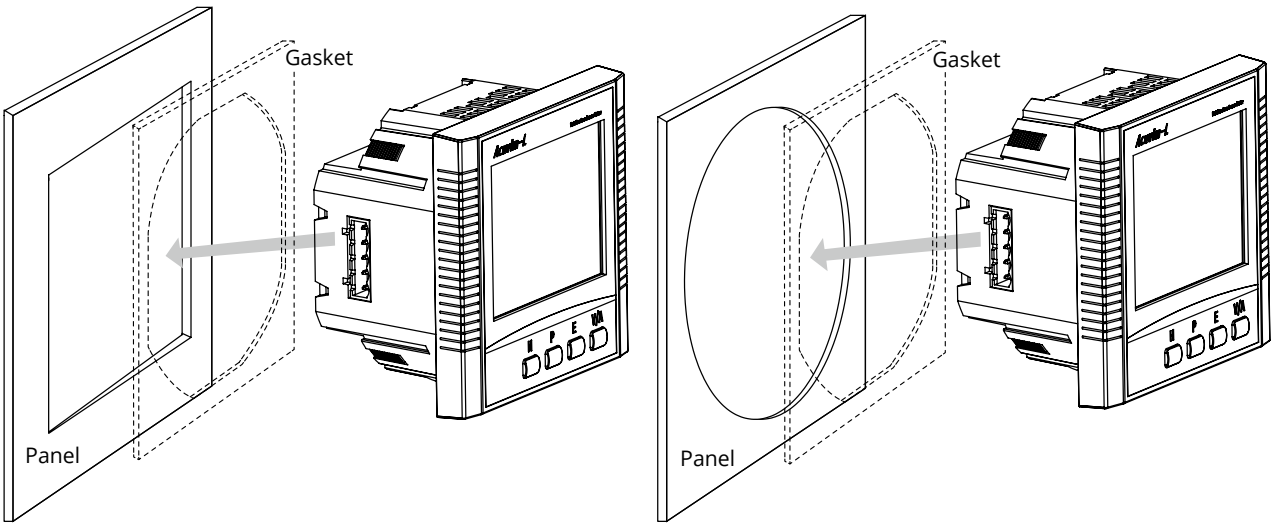

Figure 2-12 - Insert the Meter into the Gasket and Panel Opening

3. Install the clips on the back side of the meter and secure it tightly to ensure that the meter is affixed to the panel.

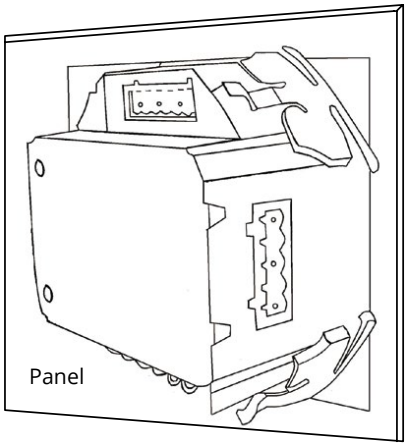

Figure 2-13 - Use the Clips to Fix the Meter to the Panel

NOTE: *The display of the meter and the remote display unit have the same installation method. The DIN rail meter is simply installed on a 35mm DIN rail.*

DIN Rail Installation Method

The DIN rail mount option meter is installed on a 35mm DIN rail.

Figure 2-14 - Acuvim-L Mount on DIN Rail

Distributed by MicroDAQ, LLC
(603) 746-5524
www.microdaq.com

AXM-DIN Installation

The AXM-DIN rail adapter provides an easy panel-mount installation for the Acuvim-L series meters using a DIN rail. Available for all meter models and I/O module options.

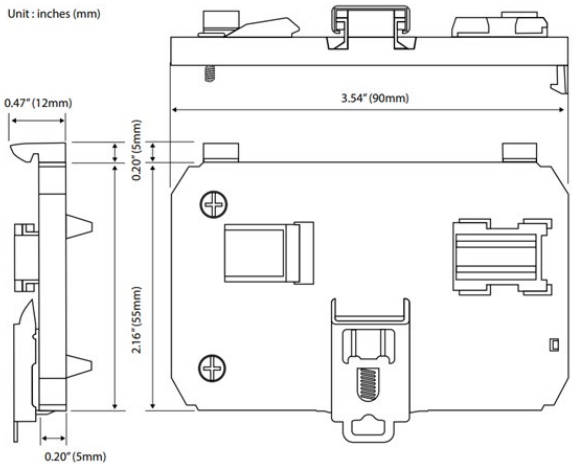

Figure 2-15 - Use the Clips to Fix the Meter to the Panel

1. The adapter can be installed directly onto the back of the Acuvim-L meter, I/O module, or communications module, if used. Simply hook and then screw the other end into the meter base. Once installed, snap the adapter into the 35mm DIN rail.

Figure 2-16 - Install AXM-DIN Rail Adapter

2. The AXM-DIN rail adapter can be adjusted for horizontal or vertical DIN rail installations.

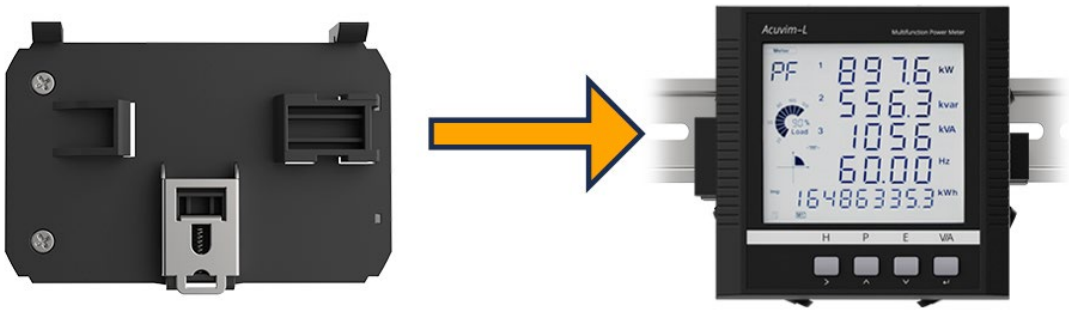

Figure 2-17a - Horizontal DIN rail installation

Distributed by MicroDAQ, LLC
(603) 746-5524
www.microdaq.com

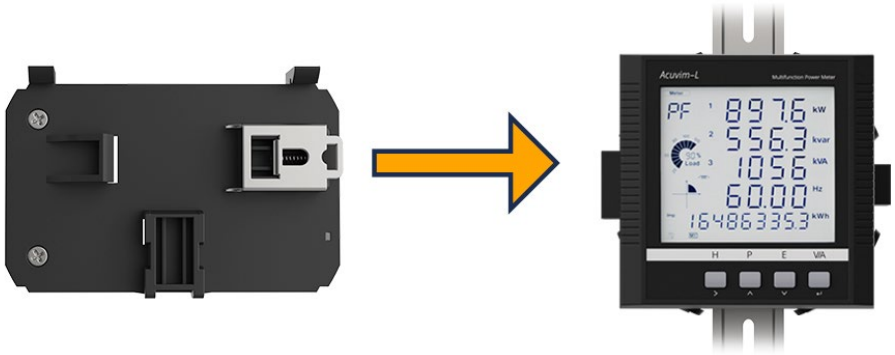

Figure 2-17b - Vertical DIN Rail Installation

Module Installation

NOTE: *Acuvim-L Power meter can connect to a maximum of two I/O modules, and one communication module the same time. The communication module refers to either an Ethernet module or one PROFIBUS module.*

1. The module is installed from the rear of the meter.
2. The module is affixed to the meter with screws.
3. The communication module must be installed first when paired together with I/O modules. For example, the Ethernet or PROFIBUS module must first be installed before adding an I/O module.

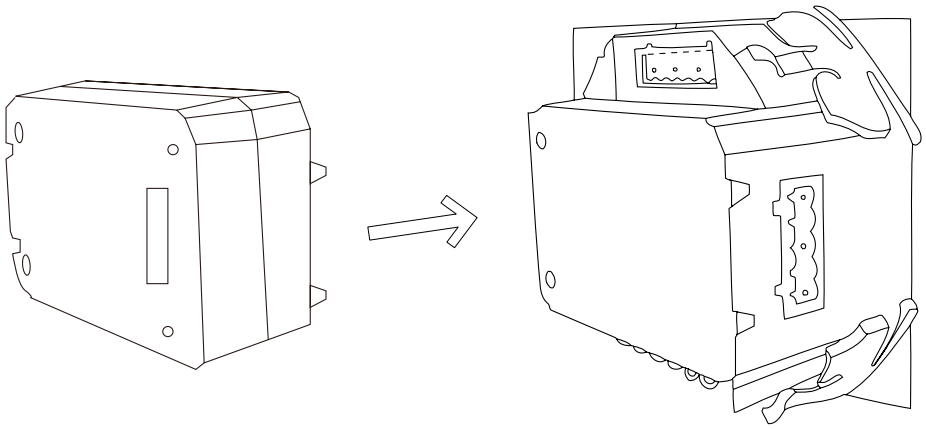

Figure 2-18 – I/O Installation Diagram

Removal Steps:

Unfasten the fixed screws and gently pull the expansion module away to separate the pin and socket. The clip of the extension module can then be removed from the clamp mouth of Acuvim-L meter.

NOTE:

1. The clamp extension can be damaged when too much force is used. Installation and removal should be done with a light tap or pull to avoid damage.

2. DANGER: Never install or remove the expansion modules while the meter is still powered.

2.3 Wiring

There are four terminal strips at the back of the Acuvim-L series meter, they are the voltage input terminal, current input terminal, power supply terminal and the communication port terminal. The three-phase voltage and current are represented by using 1, 2, and 3 respectively. These numbers have the same meaning as A, B, and C or R, S, and T used in other literature.

NOTE: *The Acuvim-L terminals have a torque rating of 7lb-in, ensure that this torque is not exceeded to prevent damage to the terminals.*

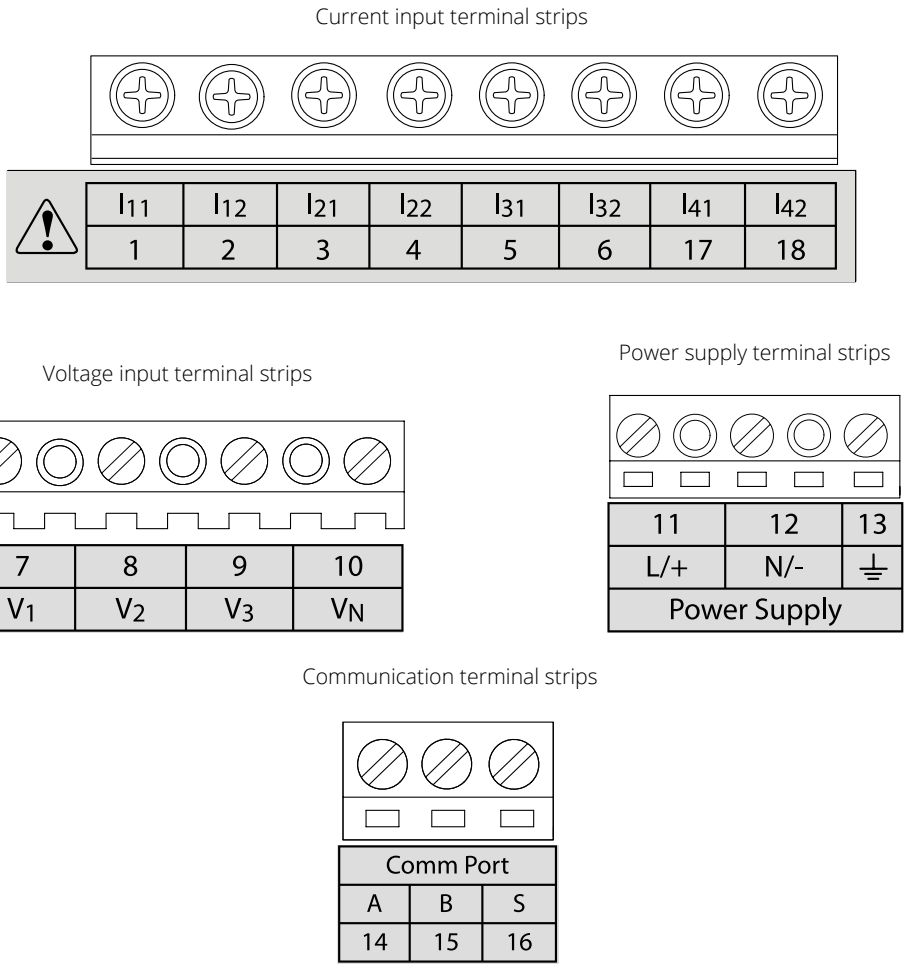

Figure 2-19 – Terminal Diagram of Acuvim-L

DANGER! *Only qualified personnel should perform wiring connections. Make sure the power supply is disconnected. Failure to follow these instructions may result in severe injury or death.*

Safety Earth Connection

Before setting up the meter's wiring, please make sure that the switch gear has an earth ground terminal. Connect both the meter and the switch gear ground terminals together. The following ground terminal symbol is used in this user's manual.

Figure 2-20 – Safety Earth Symbol

Distributed by MicroDAQ, LLC
(603) 746-5524
www.microdaq.com

2.3.1 Power Requirement

Control Power

There are two options for the control power in the Acuvim-L series meter:

1. Standard: 100-415Vac (50/60Hz) or 100-300Vdc

2. Low Voltage DC Option: 20-60Vdc

The two options must be chosen according to the application. Please see the ordering information in the appendix for further information.

NOTE: *Ensure that the control power terminal of the meter ground is connected to the safety Earth of the switch gear.*

The meter typically has a low power consumption and can be supplied by an independent source or by the measured load line. A regulator or an uninterrupted power supply (UPS) should be used under high power fluctuation conditions. Terminals for the control power supply are 11, 12, and 13 (L, N, and Ground). A switch or circuit breaker shall be included in the building installation. It shall be in close proximity to the equipment, within easy reach of the operator, and shall be marked as the disconnection device for the equipment.

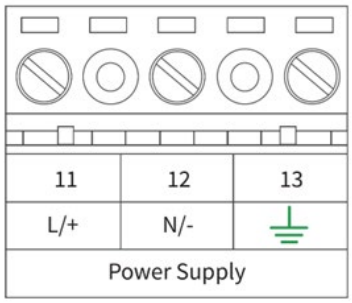

Figure 2-21 Power Supply Terminal Strip

Choice of wire for the power supply is AWG22-16 or 0.6-1.5mm². Typically, a 1A/250Vac fuse should be used in the auxiliary power supply loop. Terminal 13 must be connected to the ground terminal of the switch gear. An isolated transformer or EMC filter should be used in the power supply loop if there is a power quality issue with the power supply.

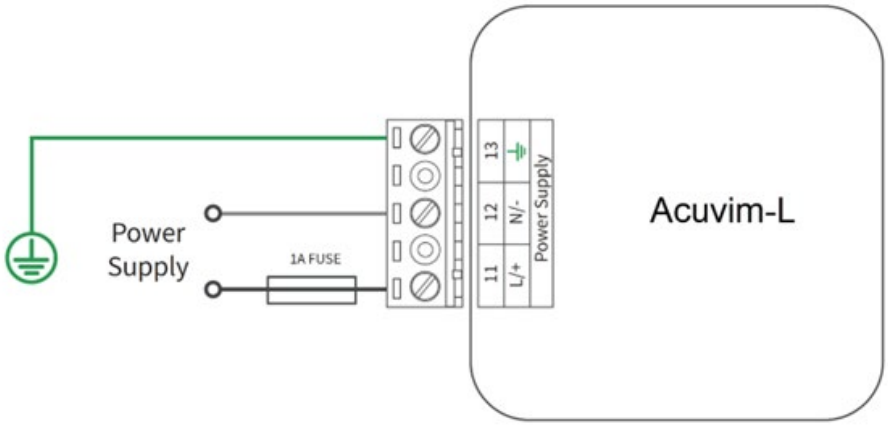

Figure 2-22 - Power Supply

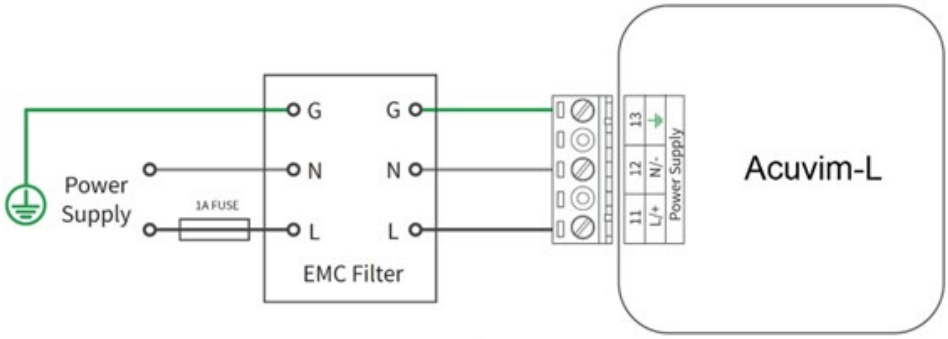

Figure 2-23 - Power Supply with EMC Filter

2.3.2 Voltage Input Wiring

Voltage Input Terminal

The voltage input terminal strip consists of four input terminals: V1 (7), V2 (8), V3 (9), and VN (10).

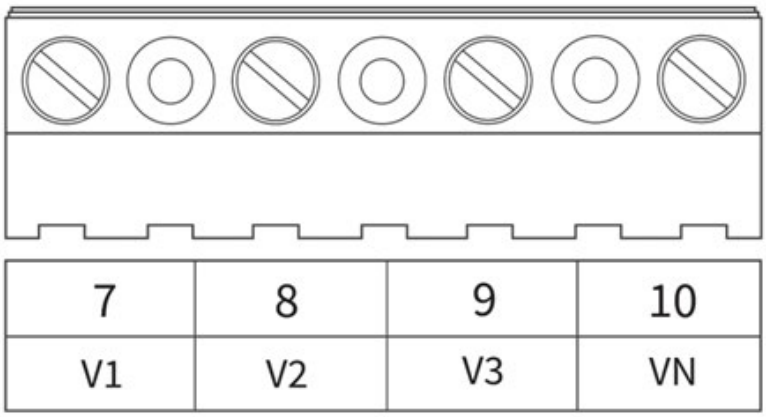

Figure 2-24 - Voltage Input

The maximum voltage input for the Acuvim-L series meter shall not exceed 400LN/690LL Vac RMS for three-phase or 400LN Vac RMS for single-phase.

In high voltage systems a Potential Transformer (PT) must be used. The typical secondary output for PTs shall be over 100V or 120V. Ensure to select an appropriate PT to maintain the measurement accuracy of the meter. When connecting with the wye configuration wiring method, the PTs primary side rated voltage should be equal to or close to the phase voltage of the system in order to utilize the full range of the PT. When connecting with the delta configuration wiring method, the PTs primary side rated voltage should be equal to or close to the line voltage of the system. A fuse (typical 1A/250Vac) should be used in the voltage input loop. The wire for voltage input is AWG16-12 or 1.3-2.0mm².

NOTE: *In no circumstance shall the secondary of the PT be shorted. The secondary of the PT shall be grounded at one end. Please refer to the wiring diagram section for further details.*

Distributed by MicroDAQ, LLC
(603) 746-5524
www.microdaq.com

Voltage Input Wiring Methods

3-Phase 4-Wire Wye Mode (3LN)

3-Phase 4-Wire wye mode is commonly used in low voltage electric distribution systems. For voltages lower than 400LN/690LL, the voltage lines can be connected directly to the meter's voltage input terminal as shown in Figure 2-25a.

For high voltage systems (over 400LN/690LL), PTs (Potential Transformers) are required as shown in Figure 2-25b.

For both scenarios the meter should be set to 3LN.

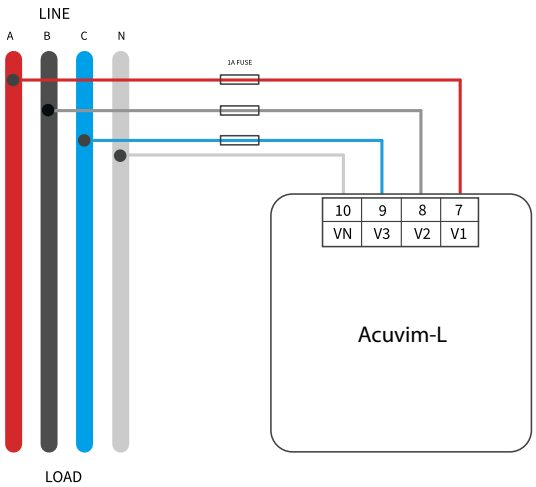

Figure 2-25a - 3LN Direct Connection

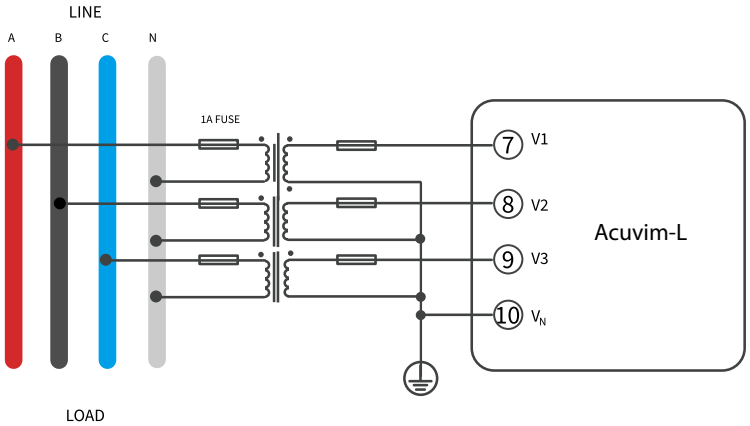

Figure 2-25b - 3LN with 3PTs

3-Phase 3-Wire Delta Mode (3LL)

3-Phase 3-Wire Delta mode is commonly used in low voltage electric distribution systems. For voltages lower than 400LN/690LL, the voltage lines can be connected directly to the meter's voltage input terminal as shown in Figure 2-25c.

For high voltage systems (over 400LN/690LL), PTs (Potential Transformers) are required as shown in Figure 2-25d.

For both scenarios the meter should be set to 3LL. Common system voltage for 3 -phase delta systems is 480V.

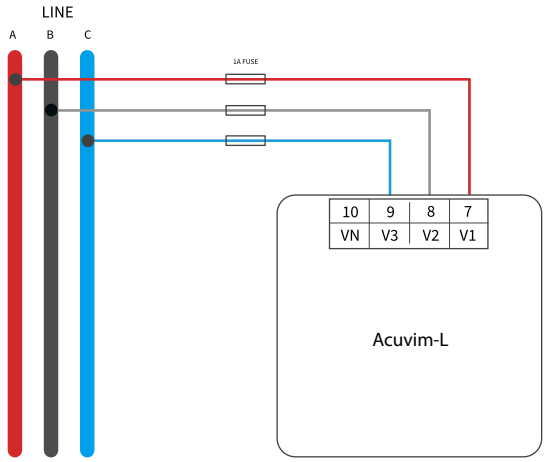

Figure 2-25c - 3LL Direct Connection

3-Phase 3-Wire Open-Phase Delta (2LL)

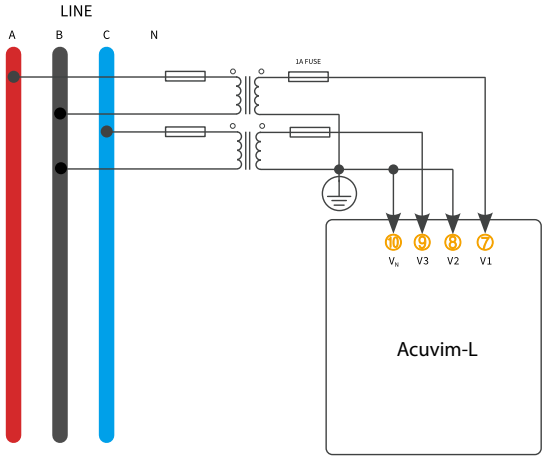

Figure 2-25d - 2LL with 2PTs

2-Phase 3-Wire Split Phase (1LL)

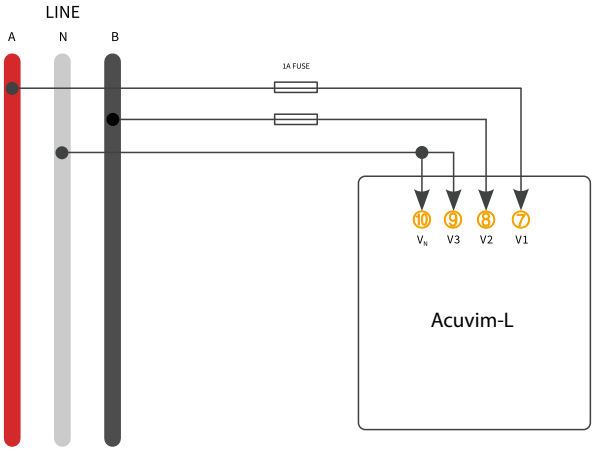

Figure 2-25e - 1LL Direction Connection

Distributed by MicroDAQ, LLC
(603) 746-5524
www.microdaq.com

1-Phase 1-Wire Single Phase (1LN)

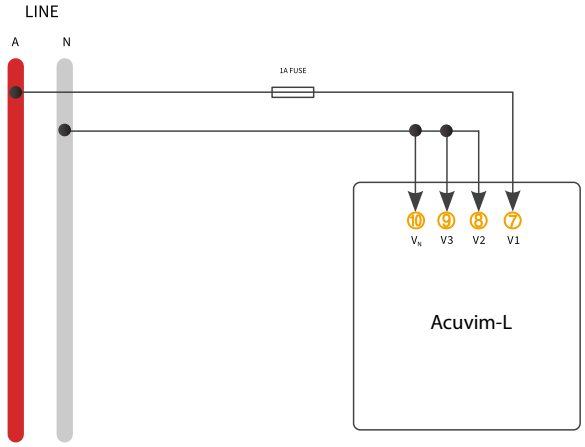

Figure 2-25f - 1LN Direct Connection

Vn Connection

Vn is the reference point of the Acuvim-L series meter voltage input. Low wire resistance helps improve the measurement accuracy. Different system wiring modes require Vn connection methods. Please refer to the wire diagram section for more details.

2.3.3 Current Input Wiring

Current Input Terminal

Current Transformers (CTs) are required for most engineering applications. Typical current rating for the secondary side of the CT shall be 5A (standard) or 1A (optional); please refer to the ordering information appendix for further details. CTs must be used if the system's rated current is over 5A. The recommended accuracy of the CT should be better than 0.5% with a rating over 3VA to preserve the meter's accuracy. The wire between the CT and the meter shall be as short as possible. The length of the wire effects measurement accuracy.

The wire size of the current input is AWG15-10 or 1.5-2.5mm².

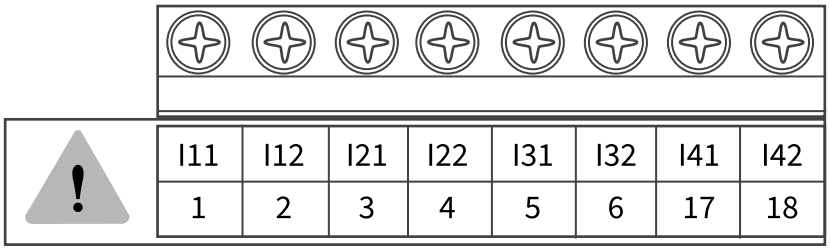

Figure 2-26 - Current Input Terminal

On the current input terminal of the Acuvim-L, there are eight current input channels for four CTs.

- Terminal 1 (I11) and 2 (I12) are for the phase A current transformer, where the positive lead of the CT is terminated to I11, and the negative lead is terminated to I12.
- Terminal 3 (I21) and 4 (I22) are for the phase B current transformer, where the positive lead of the CT is terminated to I21, and the negative lead is terminated to I22.
- Terminal 5 (I31) and 6 (I32) are for the phase C current transformer, where the positive lead of the CT is terminated to I31, and the negative lead is terminated to I32.

- Terminal 17 (I41) and 18 (I42) are for the neutral current transformer, where the positive lead of the CT is terminated to I41, and the negative lead is terminated to I42.

NOTE: *The secondary side of the CT shall not be open circuit in any circumstance when the power is on. There shall not be any fuse or switch in the CT loop. One end of the CT loop should be connected to ground if using 5A/1A Current Transformers. If using 333mV/Rogowski coil current transformers, a ground connection is not required.*

NOTE: *When I N Value setting is set to Measured, I N should be wired.*

3CT

The 3CT current wiring configuration can be used when either 3CTs are connected (as shown in Figure 2-27) or when 2 CTs are connected (as shown in Figure 2-28). In either case, there is current flowing through all three circuit terminals.

For any RCT/mV CT, do NOT ground the CTs. The figures below have the current input wiring for both 5A/1A CTs as well as RCT/mV CT s.

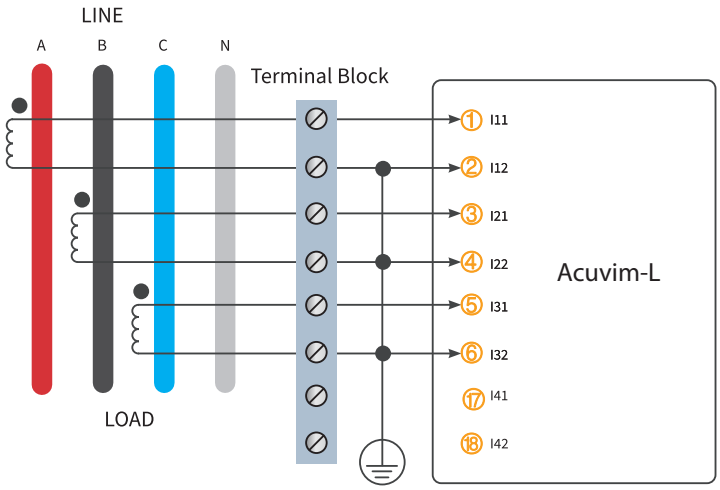

Figure 2-27a - 3 CT 5A/1A

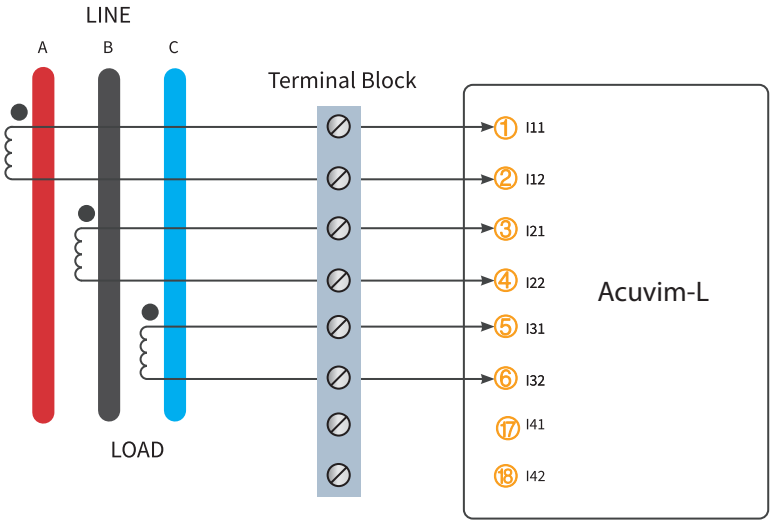

Figure 2-27b - 3 CT 333mV/mA

Distributed by MicroDAQ, LLC
(603) 746-5524
www.microdaq.com

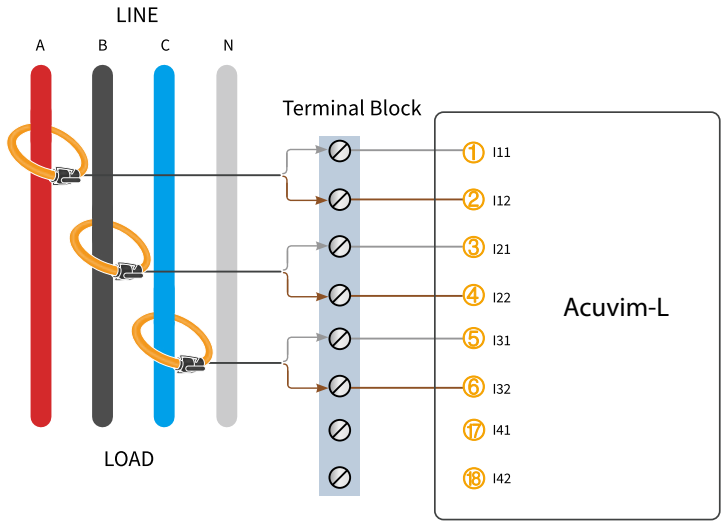

Figure 2-27c - 3 CT Rogowski Coil (RCT)

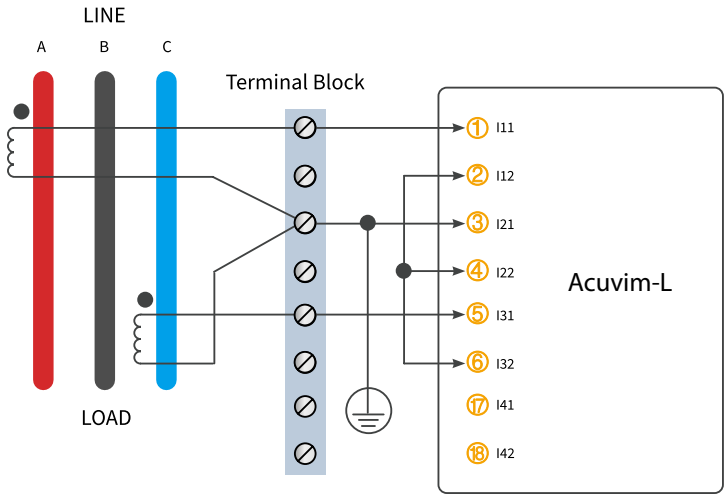

Figure 2-28a - 3CT Wiring for 5A/1A CTs with 2CT in Open-Phase Delta Systems

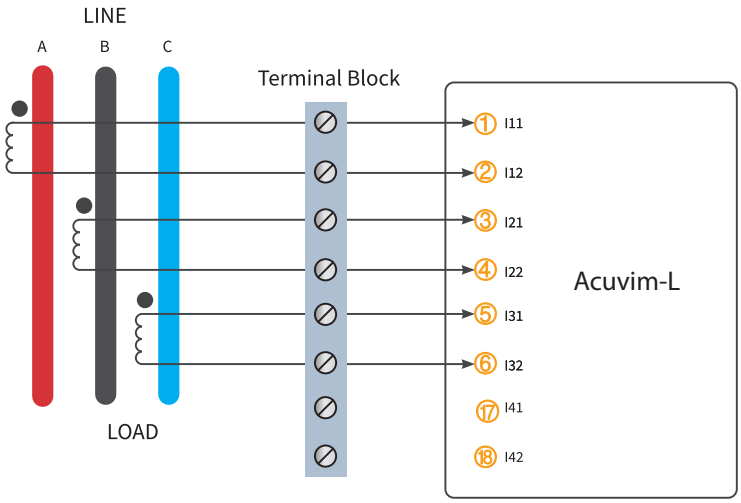

Figure 2-28b - 3CT Wiring for 333mV CTs in Open-Phase Delta Systems

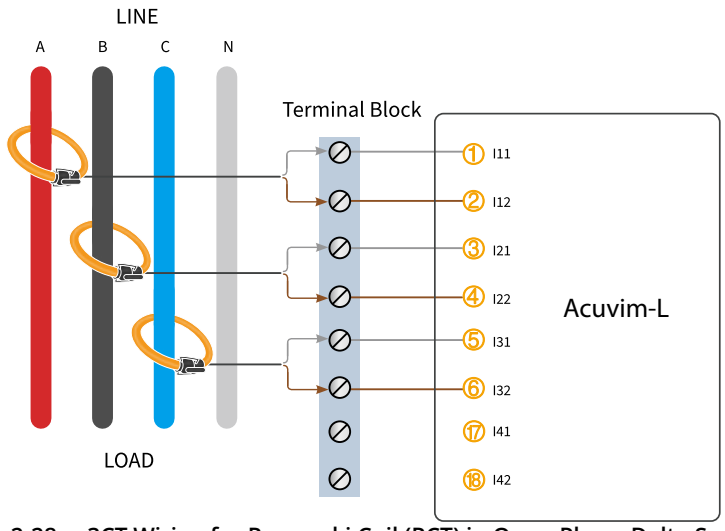

Figure 2-28c - 3CT Wiring for Rogowski Coil (RCT) in Open-Phase Delta Systems

2CT

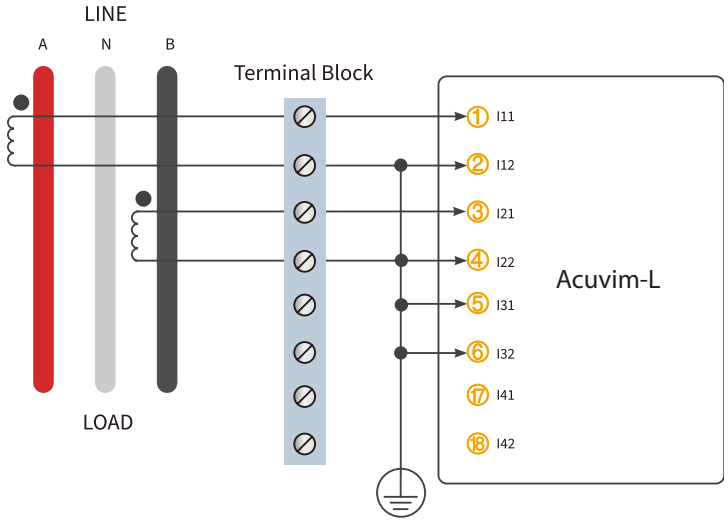

Figure 2-29a - 2CT Wiring for 5A/1A CTs in 1LL Split-Phase Systems

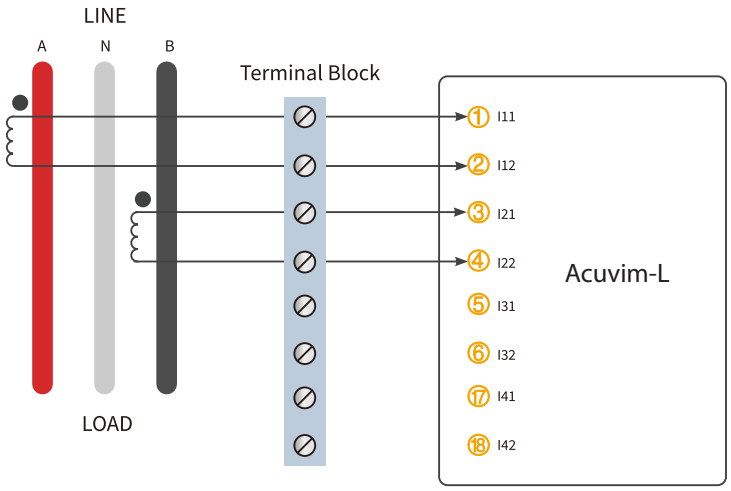

Figure 2-29b - 2CT Wiring for 333mV CTs in 1LL Split-Phase Systems

Distributed by MicroDAQ, LLC
(603) 746-5524
www.microdaq.com
ACCUENERGY
www.accuenergy.com

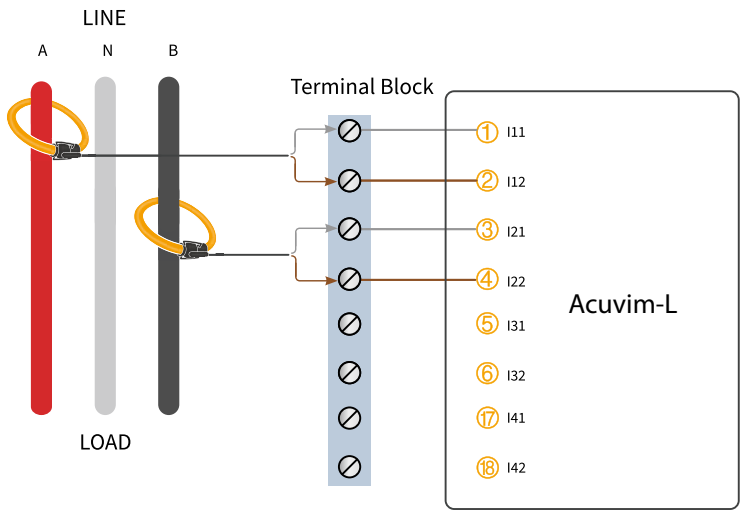

Figure 2-29c - 2CT Wiring for Rogowski Coil (RCT) in 1LL Split-Phase Systems

1CT

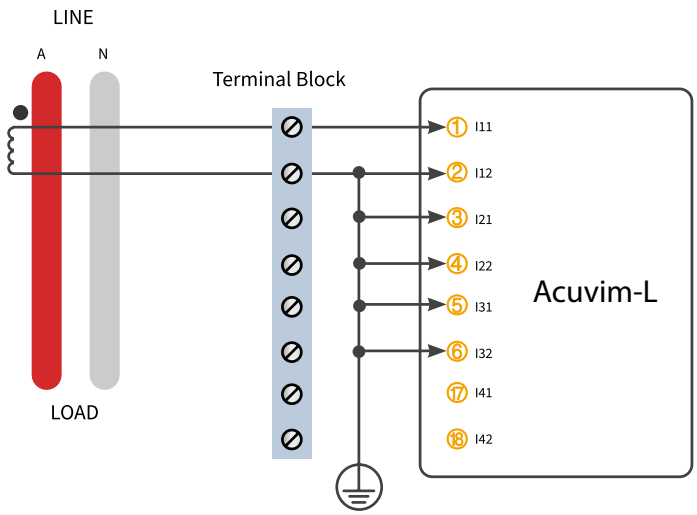

Figure 2-30a - 1CT Wiring for 5A/1A CTs in 1LN Single Phase Systems

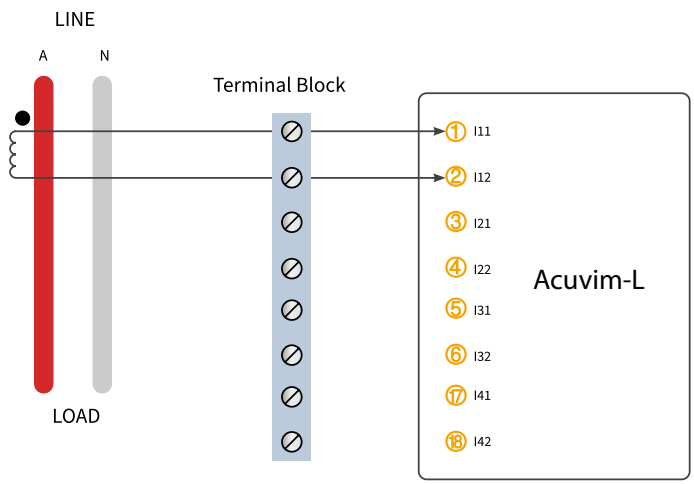

Figure 2-30b - 1CT Wiring for 333mV CTs in 1LN Single Phase Systems

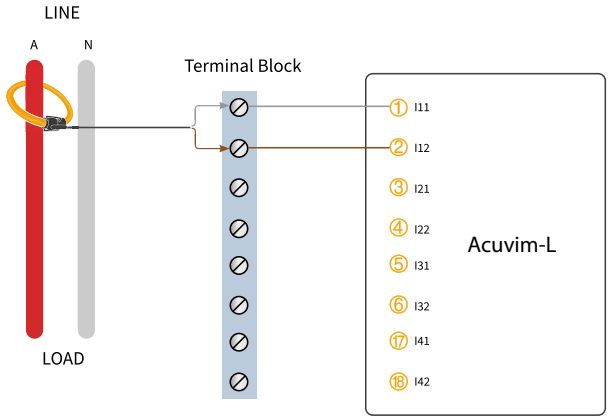

Figure 2-30c - 1CT Wiring for Rogowski Coil (RCT) in 1LN Single Phase Systems

2.3.4 Typical Wiring

Wiring Mode

The Acuvim-L series meter can be used with most of three-phase wiring scenario. Please read this section carefully before choosing the suitable wiring method for your power system.

Voltage and current input wiring mode can be set separately in the meter's parameter settings:

- The voltage wiring mode can be set as 3-phase 4-line wye (3LN), 3-phase 3-line direct connection (3LL), 3-phase 3-line open delta (2LL), single phase 2-line(1LN), and single phase 3-line(1LL).
- The current input wiring mode can be set as 3CT, 2CT, and 1CT. The voltage mode can be grouped with the current mode as 3LN-3CT (3CT or 2CT, 3LL-3CT, 2LL-3CT, 2LL-2CT, 1LL-2CT, 1LN-1CT).

2.3.5 Frequently Used Wiring Methods

This section, covers the most common voltage and current wiring combinations shown in different diagrams. To display measurement readings correctly, please select the appropriate wiring diagram for your setup and application.

The meter supports seven kinds of wiring: 3LN-3CT (3CT and 2CT two ways), 3LL-3CT, 2LL-3CT, 2LL- 2CT, 1LL-2CT, and 1LN-1CT.

Distributed by MicroDAQ, LLC
(603) 746-5524
www.microdaq.com

Typical Wiring Diagrams

1. 3LN, 3CT with 3CTs (Wiring mode: 3LN, 3CT)

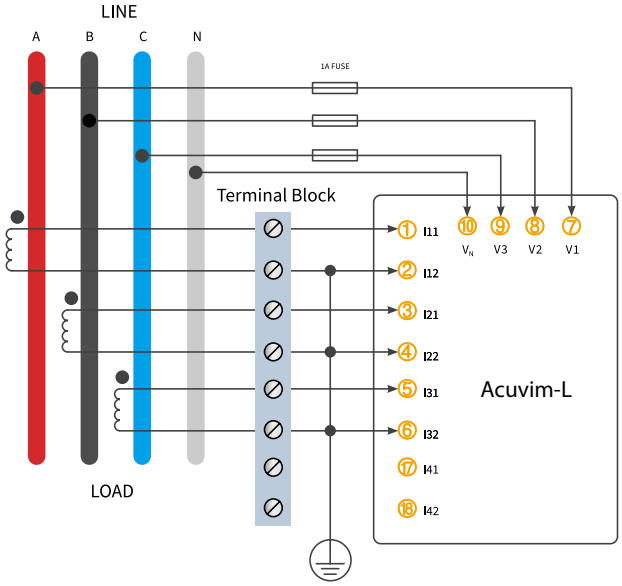

Figure 2-31a 3LN-3CT Wiring using 5A/1A CTs

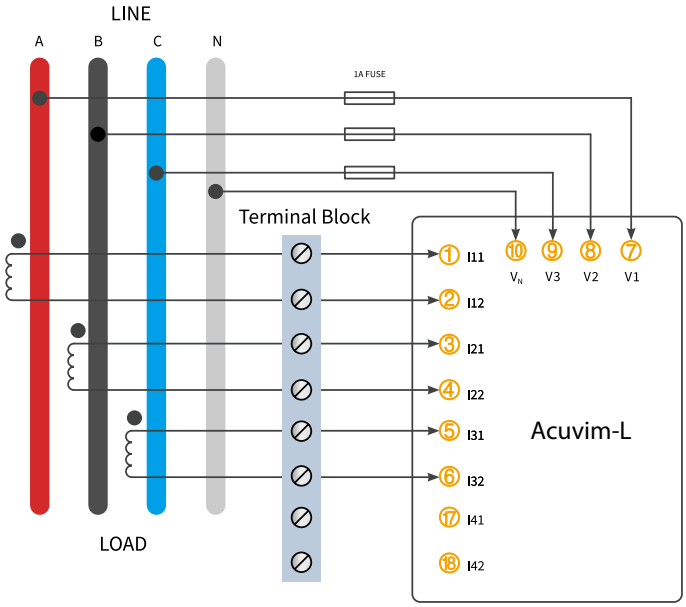

Figure 2-31b 3LN-3CT Wiring using RCT/333mV CTs

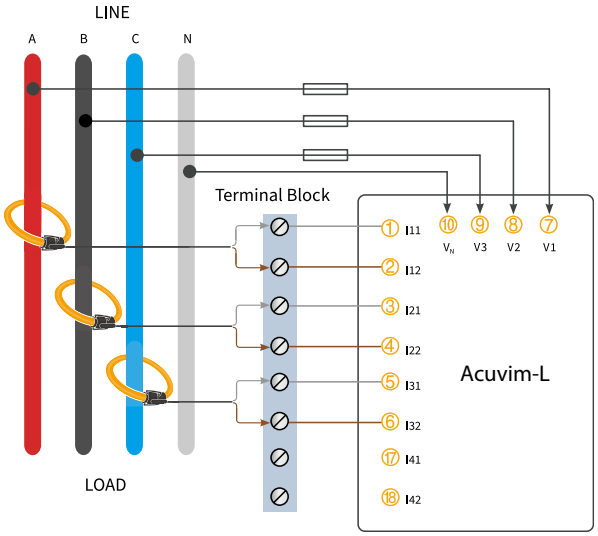

Figure 2-31c 3LN-3CT Wiring using Rogowski Coils

2. 3LN-3CT using PTs

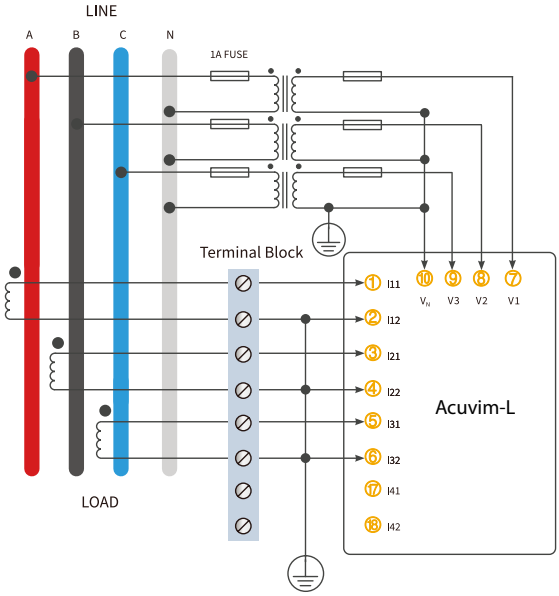

Figure 2-32a 3LN-3CT Configuration with PTs using 5A/1A CTs

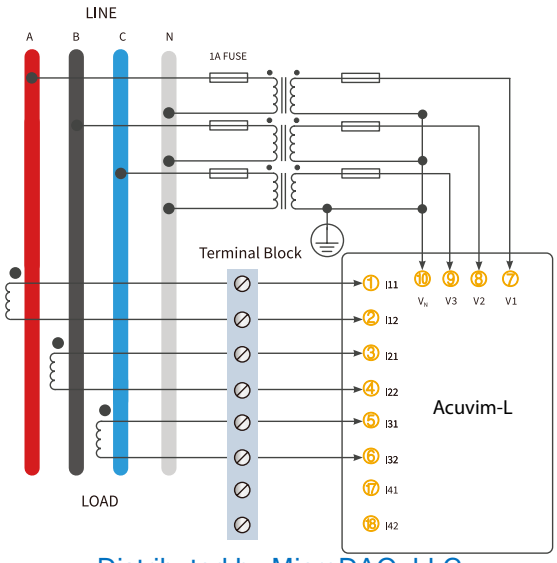

Figure 2-32b 3LN-3CT Configuration with PTs using 333mV CTs

Distributed by MicroDAQ, LLC
(603) 746-5524
www.microdaq.com

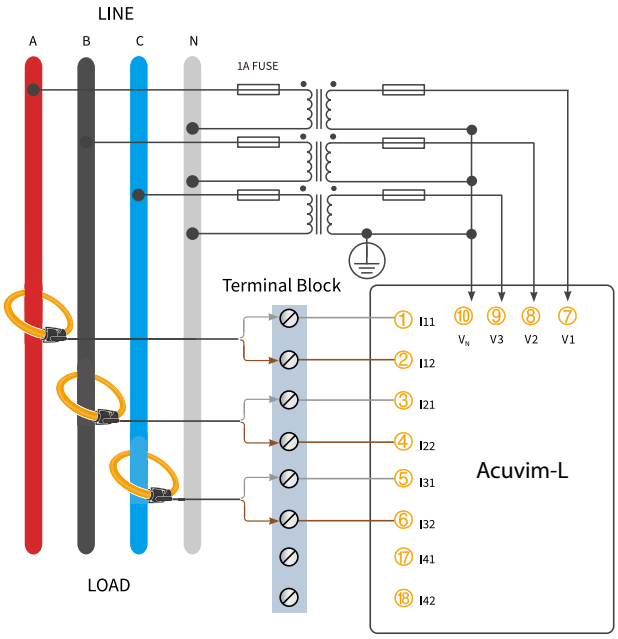

Figure 2-32c 3LN-3CT Configuration with PTs using Rogowski Coils

3. 3LL-3CT

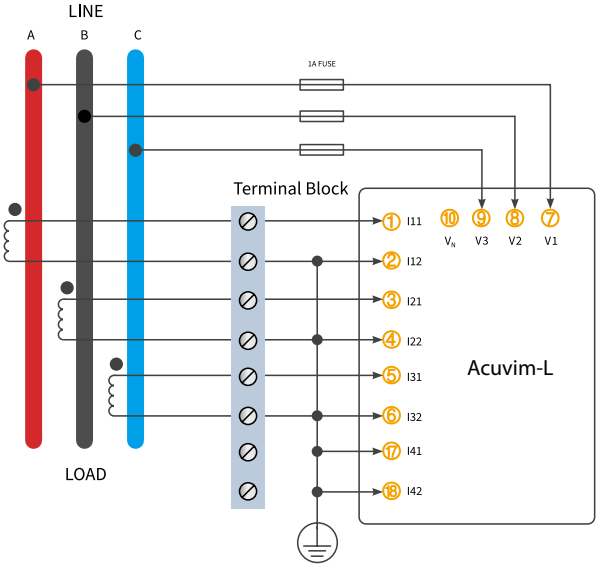

Figure 2-33a 3LL-3CT Configuration using 5A/1A CTs

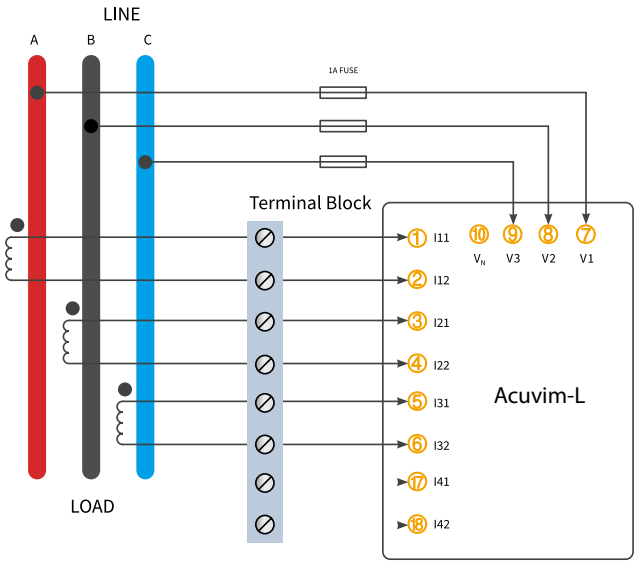

Figure 2-33b 3LL-3CT Configuration using 333mV CTs

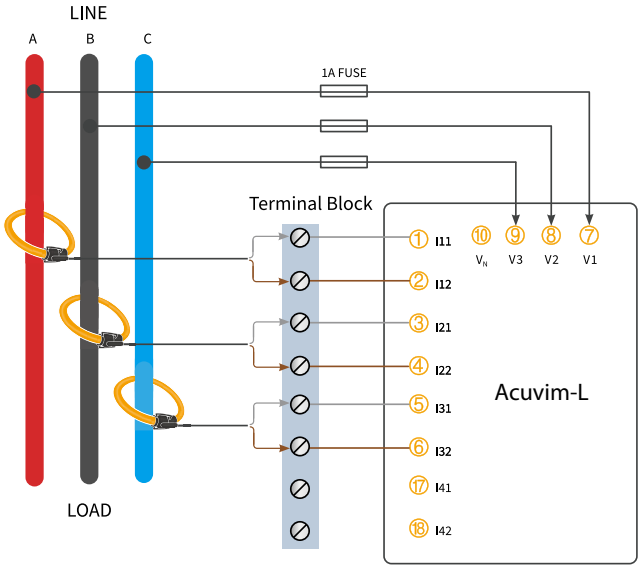

Figure 2-33c 3LL-3CT Configuration using Rogowski Coils

Distributed by MicroDAQ, LLC
(603) 746-5524
www.microdaq.com
ACCUENERGY
www.accuenergy.com

4. 2LL-3CT

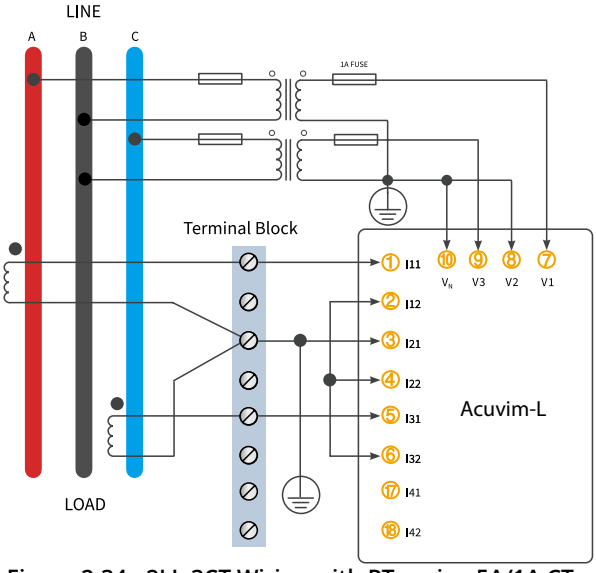

Figure 2-34a 2LL-3CT Wiring with PTs using 5A/1A CTs

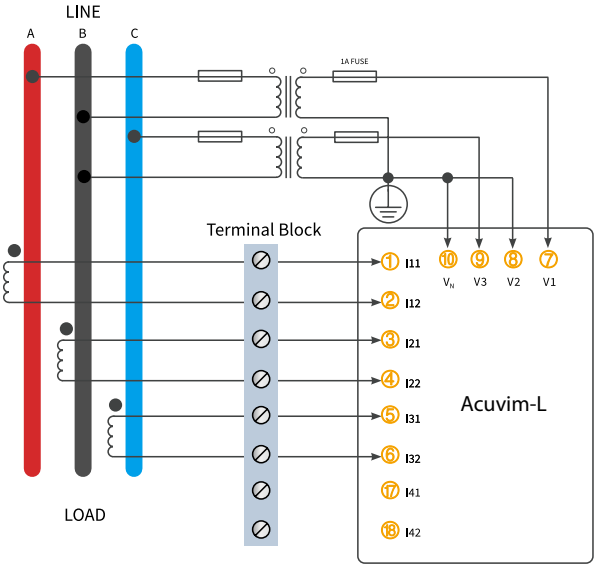

Figure 2-34b 2LL-3CT Wiring with PTs using 333mV CTs

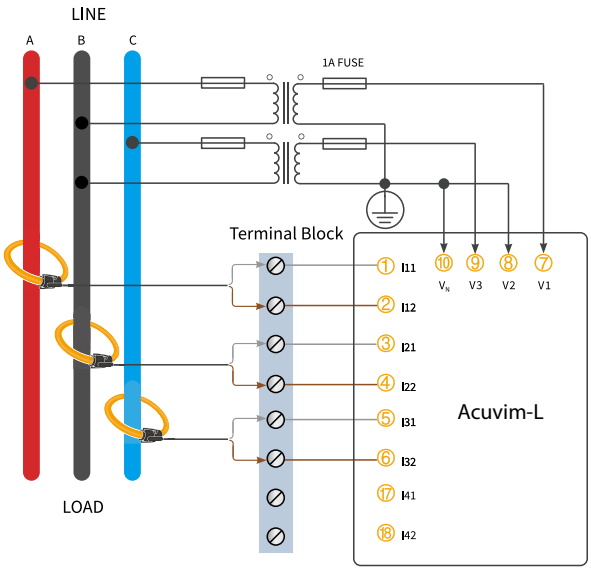

Figure 2-34c 2LL-3CT Wiring with PTs using Rogowski Coils

5. 1LN-1CT

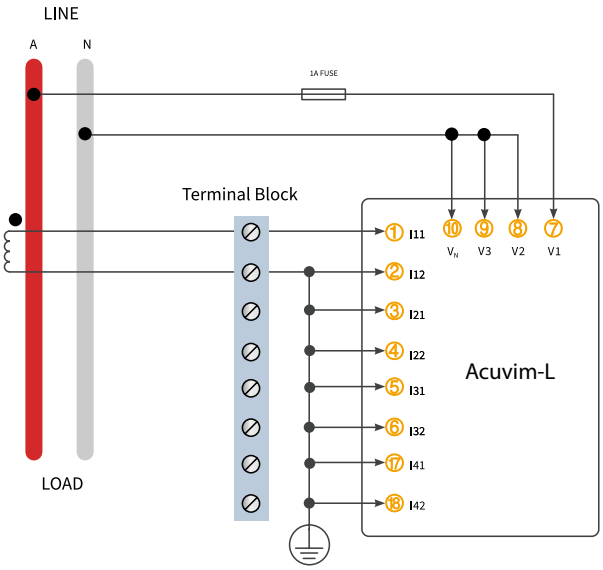

Figure 2-35a 1LN-1CT Configuration using 5A/1A CTs

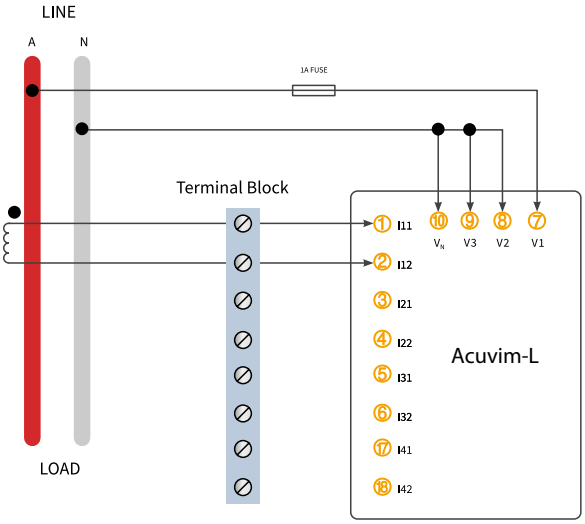

Figure 2-35b 1LN-1CT Configuration using 333mV CTs

Distributed by Microdaq.com
(603) 746-5524
www.microdaq.com

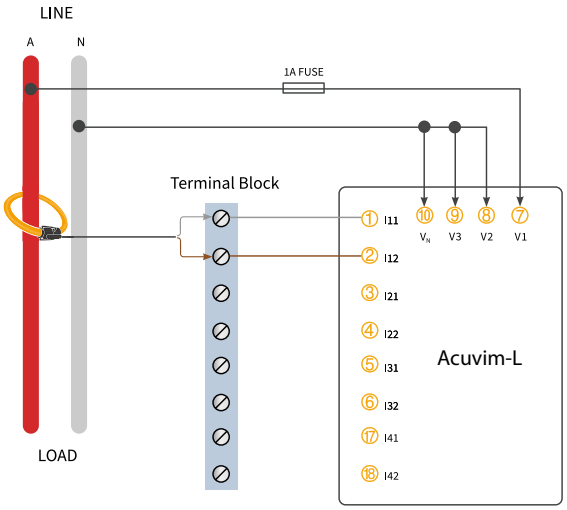

Figure 2-35c 1LN-1CT Configuration using Rogowski Coils

6. 1LL-2CT

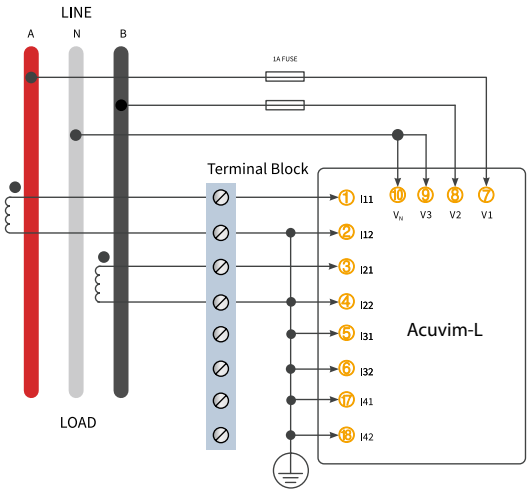

Figure 2-36a 1LL-2CT Configuration using 5A/1A CT

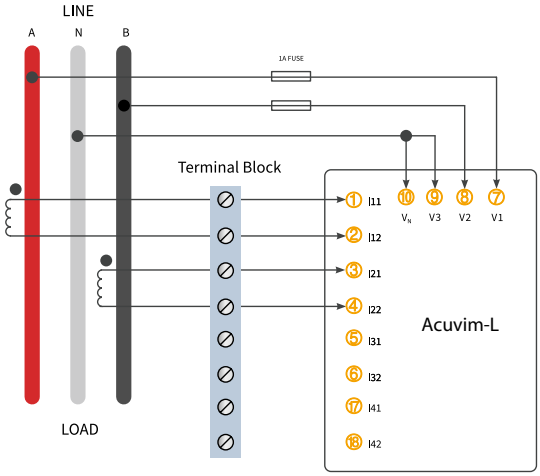

Figure 2-36b 1LL-2CT Configuration using 333mV CTs

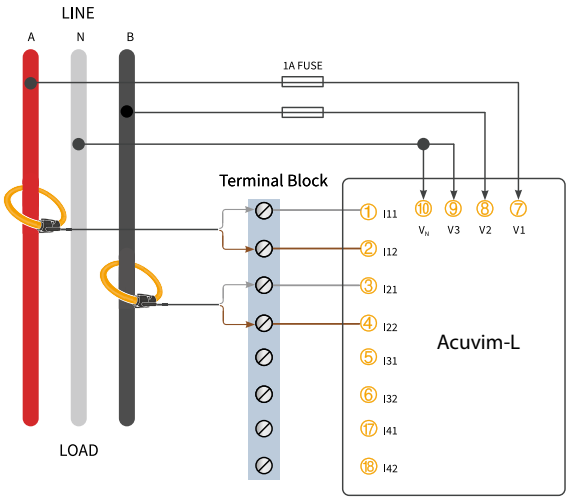

Figure 2-36c 1LL-2CT Configuration using Rogowski Coils

2.3.6 Communication

The Acuvim-L series meter uses RS485 serial communication and the Modbus RTU protocol. The terminals of communication are A, B, and S (14,15,16).

- A is the positive differential signal
- B is the negative differential signal
- S is connected to the shield of the twisted pair cables

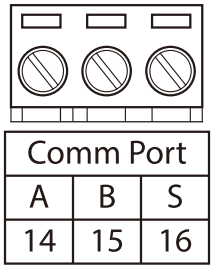

Comm Port		
A	B	S
14	15	16

Figure 2-37 Communication Port

Figure 2-38 shows the wiring of the RS485-USB converter to the meter's communication port terminals. There can be a maximum of 32 devices that can be connected on an RS485 bus.

For the wiring, use a good quality, shielded twisted pair cable, AWG22 (0.5mm²) or higher. The overall length of the RS485 cable connecting all devices should not exceed 1200m (4000ft).

Distributed by MicroDAQ, LLC
(603) 746-5524
www.microdaq.com

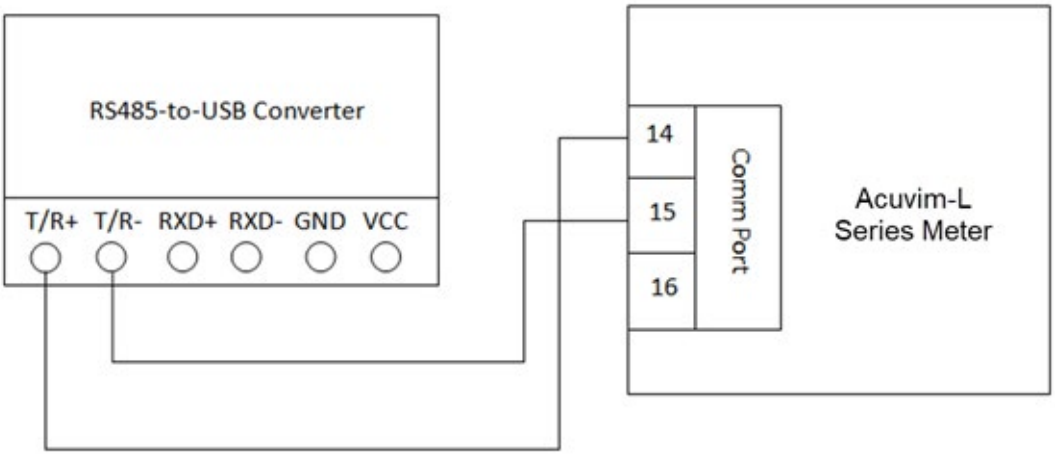

Figure 2-38 RS485-USB Connection to Acuvim-L Series Meter

The Acuvim-L series meter is used as the slave device of masters such as a PC, PLC, Data Collector, or RTU. If the master does not have an RS485 communication port, a converter (such as a RS232/RS485 or a USB/RS485 converter) will be required. Typical RS485 network topology includes line, circle, and star (wye). The shield of each segment of the RS485 cable must be connected to the ground at one end only.

Every A(+) should be connected to A(+), B(-) to B(-), otherwise it will affect the network, or may even damage the communication interface.

The connection topology should avoid "T" type topology, meaning there is a new branch, and it does not begin at the beginning point.

Keep communication cables away from sources of electrical interference whenever possible.

When using long communication cables to connect several devices, an anti-reflecting resistor (typical value 120Ω-300Ω/0.25W) is normally added to the end of the cable beside the last meter if the communication quality is distorted.

Use RS232/RS485 or a USB/RS485 converter with an optical isolated output and surge protection.

Chapter 3: Basic Operations and Applications

The detailed human-machine interface of the meter will be described in this chapter. This includes viewing real-time metering data and setting parameters using different key combination.

3.1 Display Panel and Keys

The front of the Acuvim-L series meter consists of an LCD screen and four control keys. All the display segments are illustrated in Figure 3-1. Users should note that all the segments will not display in a single page under normal conditions.

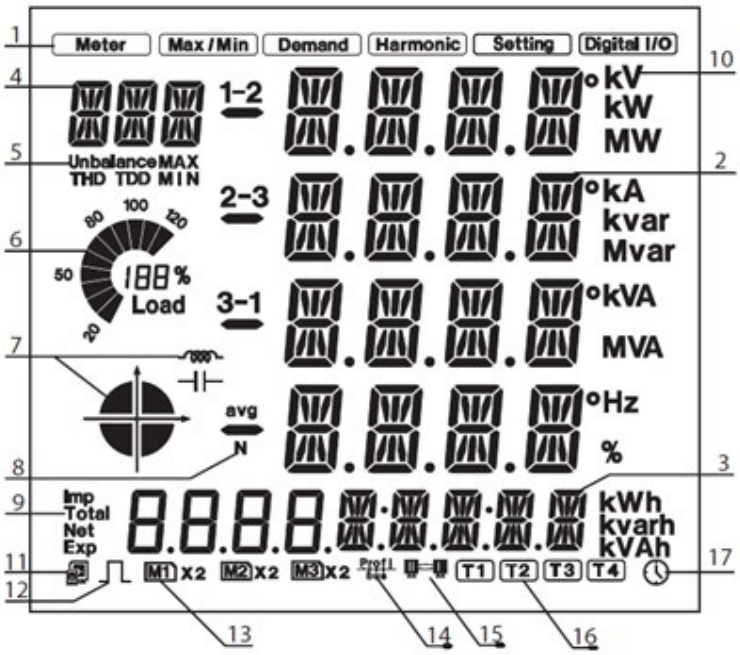

Fig 3-1 All Display Segments

The icons displayed in figure 3-1 is explained in the following table:

Table 3-1 Symbols on the LCD Screen

SN	Display	Description
1	Display Mode	Shows different modes on the display area. *Meter:* real-time measurement *Max/Min:* Statistical data *Demand:* Power demand data *Harmonic:* Harmonic data *Setting:* Parameter/meter settings *Digital I/O:* Viewing IO module data.
2	Four lines of "8" digits in the metering area	The numeric metering data will be displayed here.
3	Four "8" and five "8" digits	Display energy data and real-time clock. Also used for the setting mode and digital I/O mode display.

Distributed by MicroDAQ, LLC
(603) 746-5524
www.microdaq.com

ACCUENERGY
www.accuenergy.com

SN	Display	Description
4	Three "888" digits	Item Icons: U for voltage I for current P for active power Q for reactive power S for apparent power PF for power factor F for frequency ∠ for phase angles *DMD* for demand Mxx for expanded I/O module type and display setting page number.
5	Unbalance, THD, MAX, MIN	Item Icons: Unbalance for unbalance of the voltage and current; THD for total harmonics distortion; MAX for maximum and MIN for minimum.
6	Load rate	Displays the percentage of load to the rated current or power.
7	Four Quadrant Icon Load Type Icon	Quadrant of the System Power : Inductive Load : Capacitive Load
8	1-2, 2-3, 3-1, avg, N	*1, 2, 3:* Represents 3 phases A, B, C *1-2, 2-3, 3-1:* Represents 3 phase line to line AB, BC, CA *avg:* Represents the average *N:* stands for neutral
9	Energy icon: Imp, Total, Net, Exp	*Imp:* Import Energy *Total:* Absolute sum of Import and Export energy *Net:* Algebraic sum of Import and Export energy *Exp:* Export Energy
10	Units Measured	Voltage: *V, kV* Current: *A, kA* Active Power: *kW, MW* Reactive Power: kvar, Mvar Apparent Power: *kVA, MVA* Frequency: *Hz* Active Energy; *kWh* Reactive Energy: *kvarh* Apparent Energy: *kVAh* Percentage: *%* Phase Angle: *°*
11	Communication Icon	No Icon: no communication One Icon: query sent Two Icons: query sent, and response received
12	Energy pulse output indicator	No Icon: no pulse output With Icon: icon blinks when sending pulse output
13	Expanded I/O module indicator M1 x2 M2 x2 M3 x2	*M1:* one AXM-IO1 connected *M1x2:* two AXM-IO1 connected *None:* no AXM-IO1 connected *M2:* one AXM-IO2 connected *M2x2:* two AXM-IO2 connected *None:* no AXM-IO2 connected *M3:* one AXM-IO3 connected *M3x2:* two AXM-IO3 connected *None:* no AXM-IO3 connected

SN	Display	Description
14	Profibus Module Indicator	Icon: Profibus module connected No Icon: Profibus module not connected
15	Ethernet Module Indicator	No Icon: Ethernet module not connected With Icon: AXM-Web2 module connected when the Second Communication Protocol is set as Web2.
16	T1 T2 T3 T4	Current Tariff
17	Time icon	Time Display

There are four keys on the front panel of the Acuvim-L meter, labelled H, P, E, V/A from left to right. These four keys are used to view the real-time metering data, set parameters, and navigate the meter.

3.2 Metering Data

To view the metering data, press ***H*** and ***V/A*** simultaneously for about one second and release, this will activate the display mode selection, and the cursor will begin flashing. Press ***P*** or ***E*** to move the flashing cursor right or left. To enter the metering mode, move the cursor to select ***Meter*** then press ***V/A***. In the metering mode, the meter will display measurements such as voltage, current, power, power factor, phase angle, unbalance.

3.2.1 Voltage and Current Data

To view the voltage and current, press ***V/A*** while in metering mode.

The screen will roll to the next page when ***V/A*** is pressed again. It will go back to the first screen if you press ***V/A*** at the last screen. The following figure shows the screen sequence:

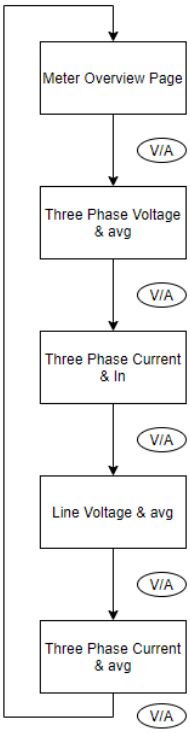

Figure 3-2 Voltage and Current Screen Sequence

Note: When the meter is set to 2LL or 3LL, there will be no phase voltage or neutral current displayed. Therefore, only the third screen (line voltage & avg) and the fourth screen (three phase current & avg) will be displayed. When the meter is set to 1LN, only phase A voltage and phase A current will be displayed, and no other screens will be displayed. When the meter is set to 1LL, there will be no

Distributed by MicroDAQ, LLC
(603) 746-5524
www.microdaq.com
ACCUENERGY
www.accuenergy.com

phase C voltage and phase C current displayed.

Figure 3-3 shows an image of the three-phase voltage reading, where **1** represents phase A, **2** represents phase B, **3** represents phase C, and **avg** represents the average phase voltage.

Similarly in Figure 3-4, the three-phase current and their average can be seen in the same representation.

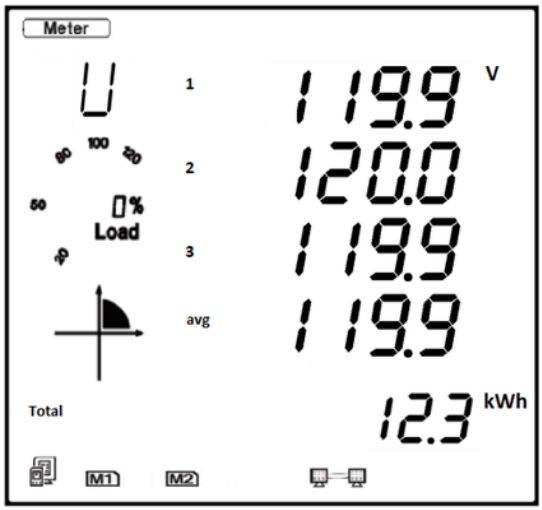

Figure 3-3 Three Phase Voltage Page

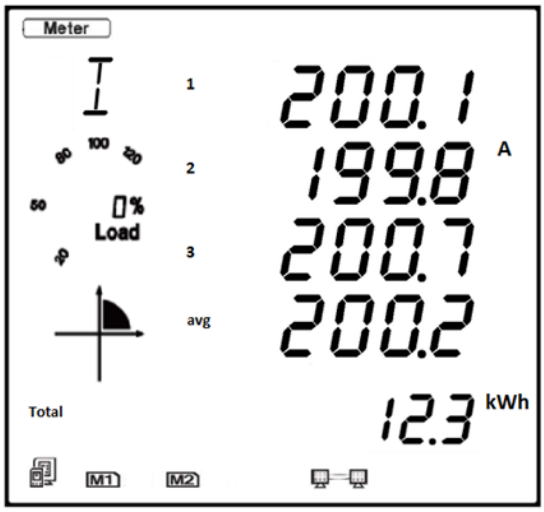

Figure 3-4 Three Phase Current Page

In the voltage and current screen sequence, the very first page provides users with an overall summary of the metering values for the Acuvim-L meter. Figure 3-5 shows the main summary page of the Acuvim-L where the top line of data refers to the average line-to-line voltage, the second line refers to the total power of the system, the third line refers to the average current, the fourth line refers to the total system power factor, and the very last line refers to the total energy.

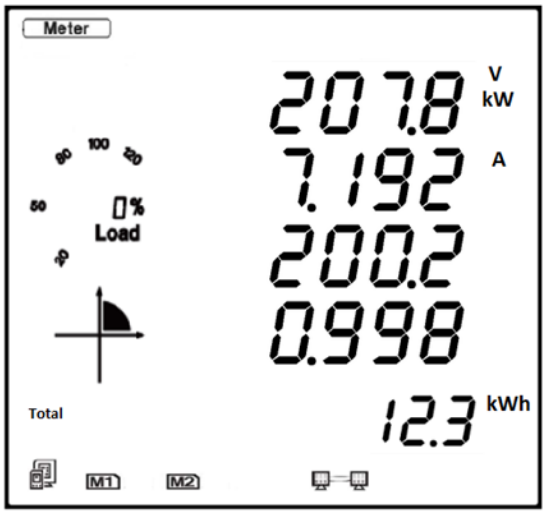

Figure 3-5 Meter Summary Page

3.2.2 Power, Power Factor, and Frequency

To view all power related data, press P while in metering mode.

The screen will roll to the next page when P is pressed again. It will return to the first screen when P is pressed on the last screen. The following figure shows the screen sequence:

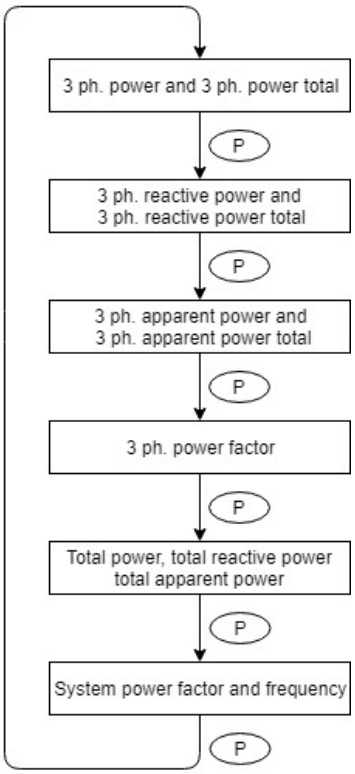

Figure 3-6 Power, Power Factor, and Frequency Screen Sequence

NOTE: When the meter is set to 2LL or 3LL, only the fifth screen (system power) and the sixth screen (system power factor & frequency) will be displayed. When the meter is set to 1LN, only phase A power and phase A power factor will be displayed. When the meter is set to 1LL, there will be no phase C power and phase C power factor displayed.

Distributed by MicroDAQ, LLC
(603) 746-5524
www.microdaq.com

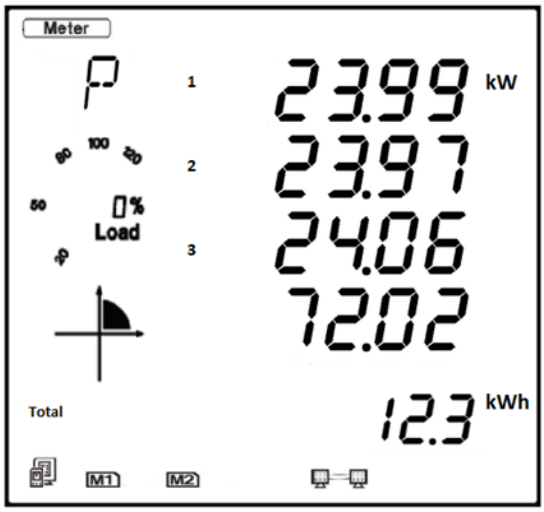

Figure 3-7 Three Phase Power Page

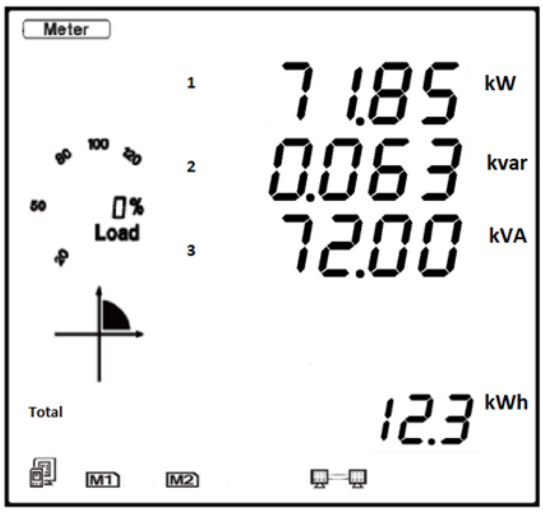

Figure 3-8 Total System Power Page

3.2.3 Phase Angles and Unbalance

To view the phase angle and unbalance data, press ***H*** while in metering mode.

The screen will roll to the next page when ***H*** is pressed again. It will return to the first screen when ***H*** is pressed on the last screen. The following figure shows the screen sequence:

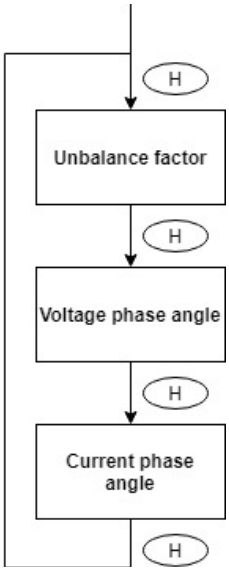

Figure 3-9 Phase Angle and Unbalance Screen Sequence

NOTE: When using 2LL or 3LL wiring modes, the voltage here stands for line-to-line voltage. Otherwise, the voltage stands for line-to-neutral voltage. When the meter is set to 1LN, only phase A current to phase A voltage angle will be displayed. When the meter is set to 1LL, there will be no phase C voltage or current to phase A voltage angle displayed.

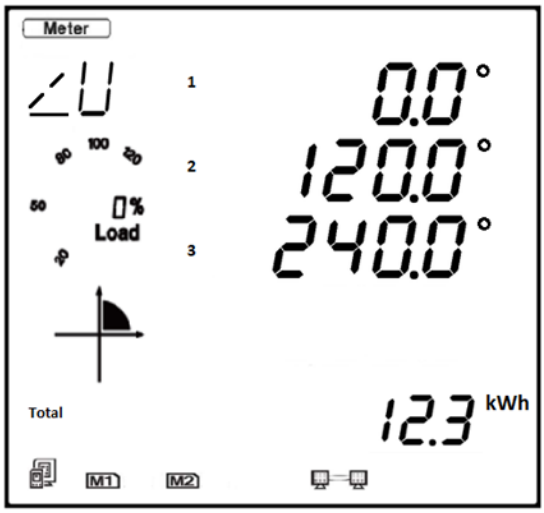

Figure 3-10 Voltage Phase Angle Page

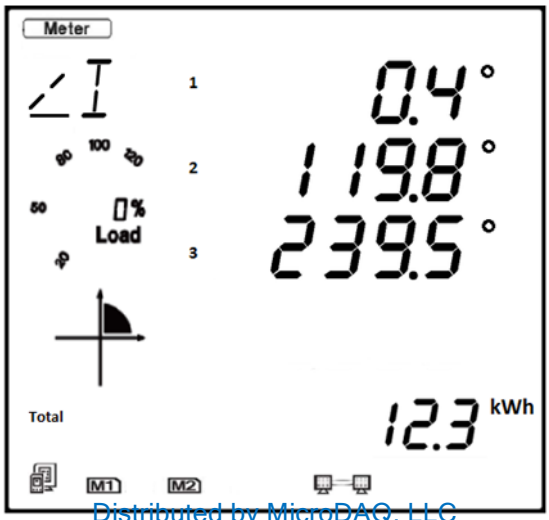

Figure 3-11 Current Phase Angle Page

Distributed by MicroDAQ, LLC
(603) 746-5524
www.microdaq.com

3.2.4 Energy

To view the energy and real time clock on the meter, press the ***E*** button. The screen will roll to the next page when ***E*** is pressed again. It will return to the first screen when ***E*** is pressed on the last screen.

The Acuvim-L series meter can be set to record either primary or secondary energy. The unit of energy is kWh for active energy, kvarh for reactive energy, and kVAh for apparent energy. The running time has a resolution of 0.01h. The meter begins accumulating time upon initial powering of the unit. The accumulated time is stored in the non-volatile memory and can be reset via communication interface or from the meters display.

The energy reading on the Acuvim-L meter can be read at the bottom of the display, where users can cycle between different types of energy on any metering page on the meter except for the Meter Summary page. The metering summary page only displays the Total energy (kWh). The following flow chart shows the screen sequence for the energy readings.

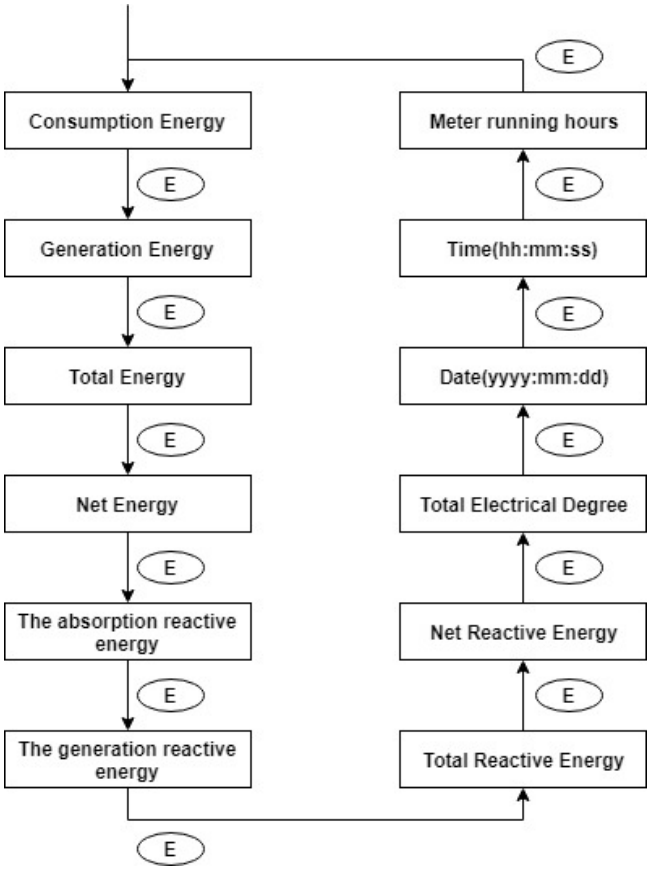

Figure 3-12 Energy and Real Time Clock Screen Sequence

There are different types of energy that the Acuvim-L meter can measure, Figure 3-13 shows the Import Active Energy represented by the ***IMP*** icon and the ***kWh*** unit.

Table 3-2 shows the different icons and units for all the energy measurements in the Acuvim-L meter.

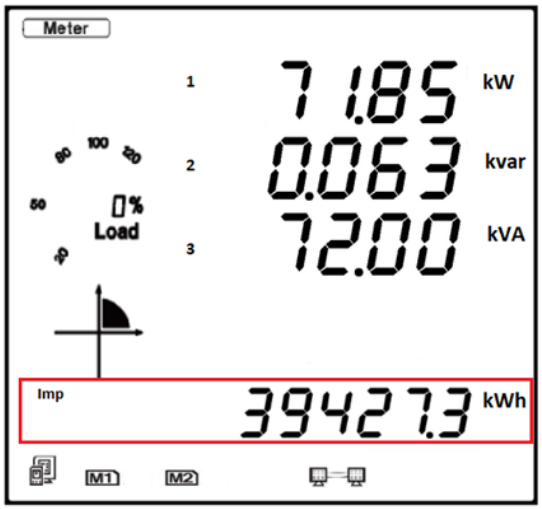

Figure 3-13 Imported Active Energy Reading

Table 3-2 Energy Parameter Table

Icon	Parameter	Unit
Imp	Import Energy	kWh
Exp	Export Energy	kWh
Net	Net Energy	kWh
Total	Total Energy	kWh
Imp	Import Reactive Energy	kvarh
Exp	Export Reactive Energy	kvarh
Net	Net Reactive Energy	kvarh
Total	Total Reactive Energy	kvarh
	Apparent Energy	kVAh

The meter's date and time can be found in the energy screen sequence. Figure 3-14 shows the date displayed on the meter screen. The date is read as YYYY.MM.DD; the figure below shows the date as April 28th, 2020. Additionally, when viewing the time/date on the meter display, the time icon will be displayed on the bottom right corner of the meter screen.

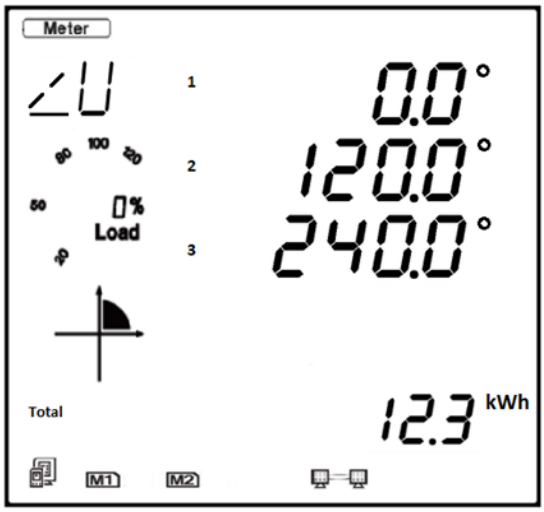

Figure 3-14 Time & Date Reading

Distributed by MicroDAQ, LLC
(603) 746-5524
www.microdaq.com

3.2.5 TOU Display

In the metering mode, press ***P*** and ***E*** simultaneously to enter the TOU (time of use) mode. In the TOU mode, the meter displays the energy, maximum demand, and its time in different tariffs.

The screen sequence for the TOU data can be seen in Figure 3-15.

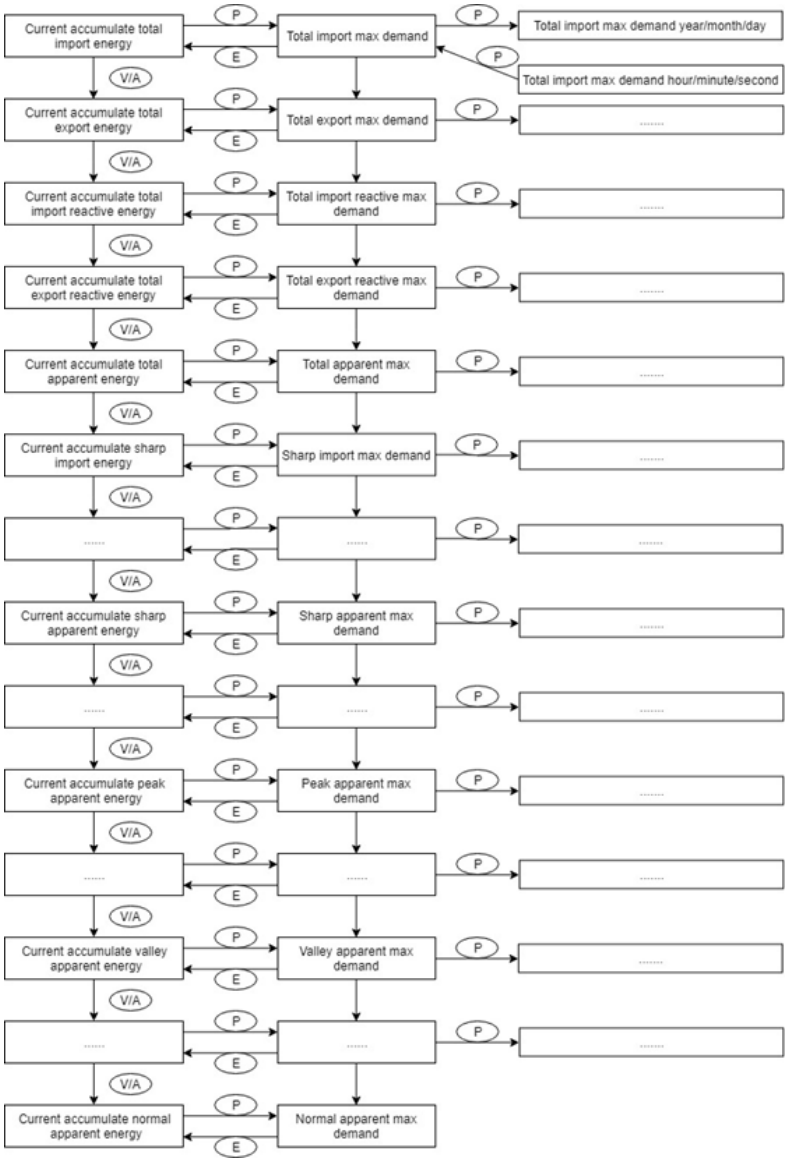

Figure 3-15 TOU screen sequence

3.2.6 Load Time

In the metering mode, press H and P simultaneously to enter the Load Time mode. In the Load Time mode, the meter displays the Acuvim-L meter's running hours with load. To exit Load Time mode, simply press H and P simultaneously.

The figure below shows the device running with load for 728.38 hours.

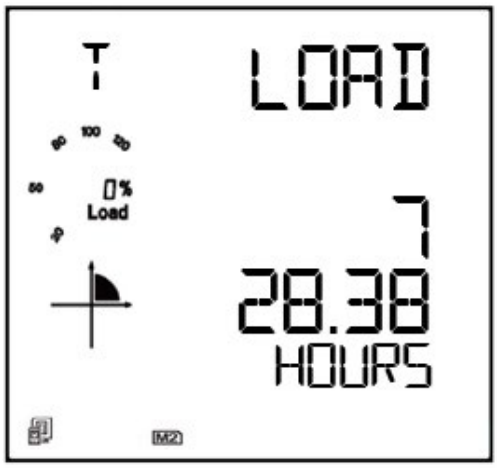

Figure 3-16 Load Time Display

3.2.7 Dual Source

In the metering mode, press E and V/A simultaneously to enter the Dual Source mode. In the Dual Source mode, the meter displays the dual source energy measurements. To exit Dual Source mode, simply press E and V/A simultaneously.

The screen sequence for the Dual Source energy readings can be seen in Figure 3-17. The HMI screens for “Energy 1 (To Grid)” and “Energy 1 (To Generator)” can be seen in Figure 3-18 and 3-19 respectively. “Energy 1 (To Grid)” is displayed as “E1 - G” (“E1 – 6"), while “Energy 1 (To Generator)” is displayed as “E1 - A”.

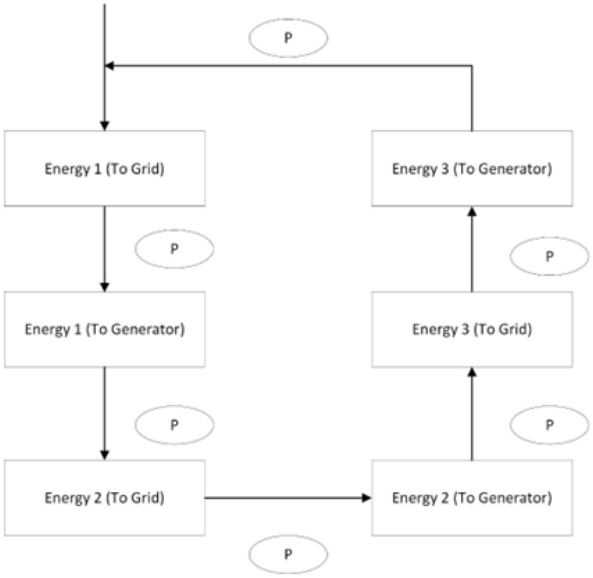

Figure 3-17 Dual Source Screen Sequence

Distributed by MicroDAQ, LLC
(603) 746-5524
www.microdaq.com
ACCUENERGY
www.accuenergy.com

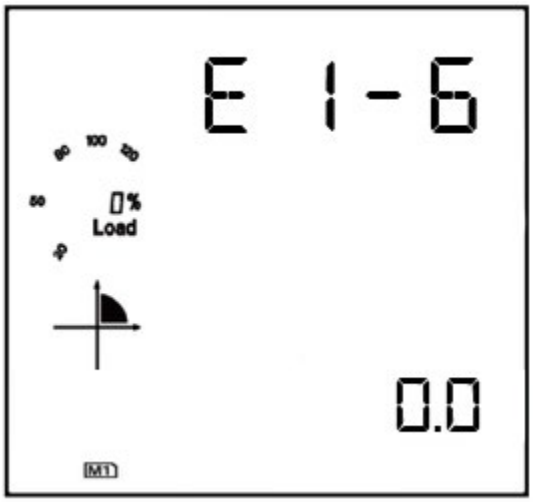

Figure 3-18 Energy 1 (To Grid) Display

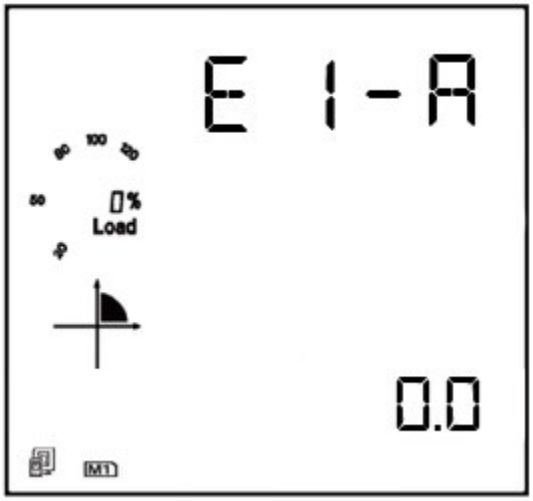

Figure 3-19 Energy 1 (To Generator) Display

3.3 Statistical Data

In the statistical data mode, the meter displays the maximum and minimum values for voltage, current, power, power factor, unbalance, demand, THD, and other parameters. To change the mode of the Acuvim-L meter to view statistical data, press ***H*** and ***V/A*** keys simultaneously for about one second and release, the screen will go blank, and the cursor will be flashing. Press either ***P*** or ***E*** key to move the flashing cursor over to select ***Max/Min*** and press ***V/A*** to enter and view the statistical data.

When ***P*** is pressed, the screen will roll to the next page, and will roll back to the first screen when ***P*** is pressed at the last page. When ***E*** is pressed, the screen will roll to the previous page, and will roll to the last screen when pressed at the first page.

Press ***V/A*** to switch the view between maximum and minimum. For example, if the current display is showing the maximum phase voltage value, then when ***V/A*** is pressed, the display will show the minimum phase voltage value. If ***V/A*** is pressed again, the display will switch back to show the maximum phase voltage value. The following figure shows the screen sequence:

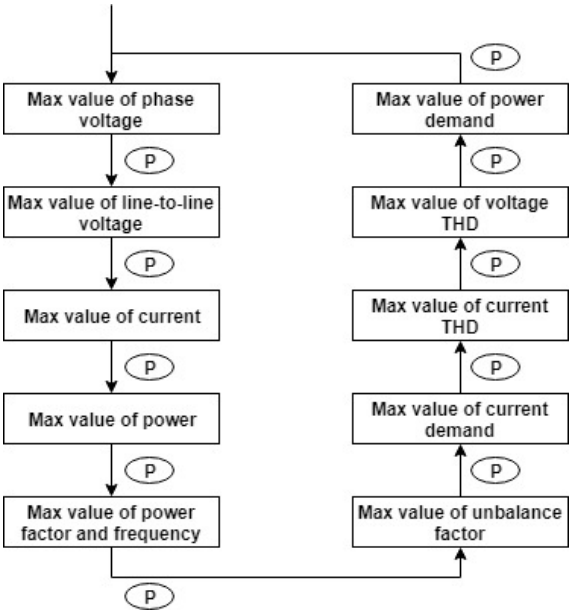

Figure 3-20 Max/Min Screen Sequence

NOTE: The figure shows the rolling screen sequence when P is pressed. The sequence direction will be reversed if users press E to roll between screens. When the meter is set to 2LL or 3LL, the first screen (max value of phase voltage) will not be displayed. When the meter is set to 1LL, certain displays are not available, such as phase C voltage, Ubc and Uca line voltage, phase C current, three phase voltage and current unbalance factor, Uc and Ic THD, phase C current demand, and so forth.

NOTE: The timestamp for the max/min parameters can be viewed only from the Acuview 2 software or through Modbus communication. There are no commands associated with the H key in the Max/Min display mode.

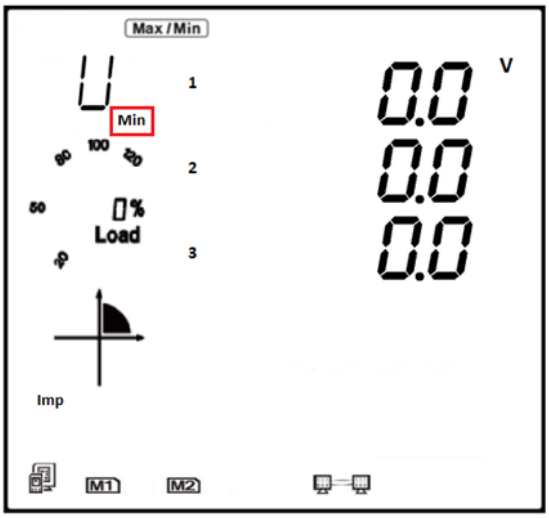

Figure 3-21 Acuvim-L Minimum Readings

Distributed by MicroDAQ, LLC
(603) 746-5524
www.microdaq.com
ACCUENERGY
www.accuenergy.com

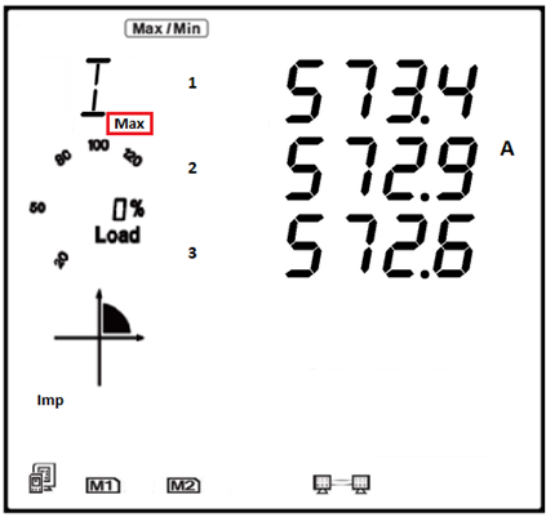

Figure 3-22 Acuvim-L Maximum Readings

3.4 Demand Display

To view the demand data, press ***H*** and ***V/A*** keys simultaneously for about one second and release, the screen will go blank, and the cursor will be flashing. Press either ***P*** or ***E*** key to move the flashing cursor over to select ***Demand*** and press ***V/A*** to view the meters demand data. The first screen shown is the demand of active power, reactive power, and apparent power. Press either ***P*** or ***E*** key to view the current demand of phase A, phase B, and phase C. The power demand and current demand are the only two screens that can be read in the demand mode.

NOTE: When the meter is set to 1LL, there will be no phase C current demand displayed. When the meter is set to 1LN, there will be no phase B and C current demand displayed.

NOTE: There are no commands associated with the V/A and H key in the demand readings page.

Figure 3-23 shows the power demand screen that has a system active power demand of 112.7 kW, system reactive power demand of 0.063 kvar, and a system power demand of 115.1 kVA.

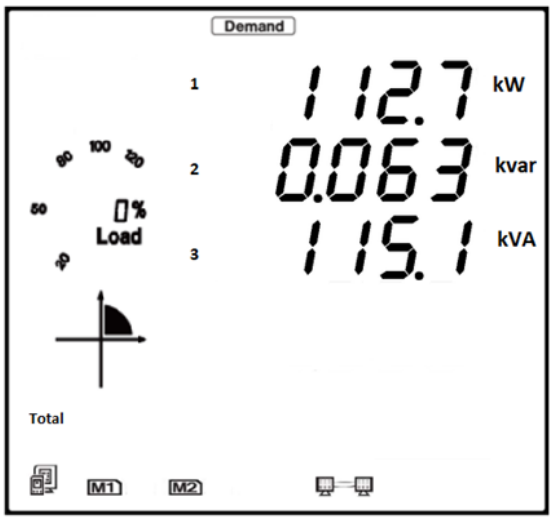

Figure 3-23 Power Demand Screen

3.5 Harmonics Data

In the Harmonic data mode, the meter displays the individual harmonic data for voltage and current, Total Harmonic Distortion, odd Harmonic Distortion, even Harmonic Distortion, Crest Factor, and K Factor. To view the Harmonic data, press ***H*** and ***V/A*** keys simultaneously for about one second and release, the screen will go blank, and the cursor will be flashing. Press either ***P*** or ***E*** key to move the flashing cursor over to select ***Harmonic*** and press ***V/A*** to view the Harmonic data of the meter.

3.5.1 Power Quality Data

While in the Harmonic data mode, press ***H*** to display the power quality data. Pressing the ***H*** key again will roll the screen to the next page and will return to the first screen when ***H*** is pressed at the last page.

The figure below shows the screen sequence for the power quality parameters.

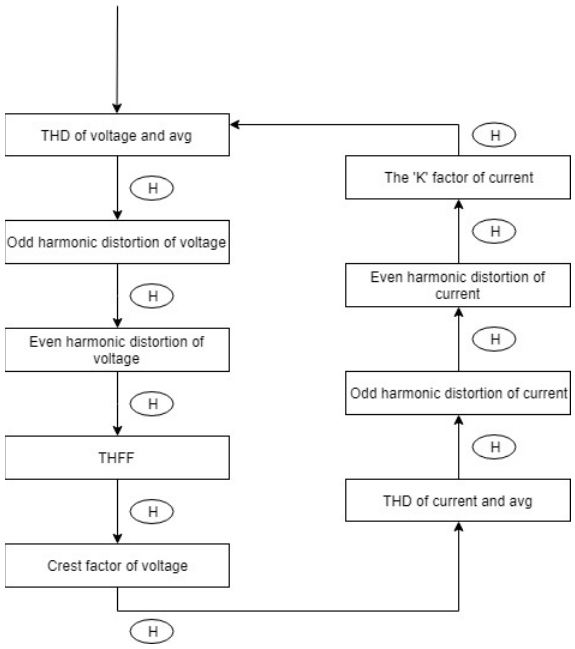

Figure 3-24 Power Quality Screen Sequence

NOTE: When the meter is set to 1LN, only phase A will be displayed for voltage THD, voltage odd harmonic distortion, voltage even harmonic distortion, THFF, voltage crest, current THD, current odd harmonic distortion, current even harmonic distortion, and current K factor. When the meter is set to 1LL, phase C will not be displayed.

Figure 3-25 below shows the Total Harmonic Distortion for Voltage, where Phase A THD is 2.050%, Phase B THD is 1.990%, Phase C THD is 1.920%, and the Average Phase Voltage THD is 1.986%.

Distributed by MicroDAQ, LLC
(603) 746-5524
www.microdaq.com

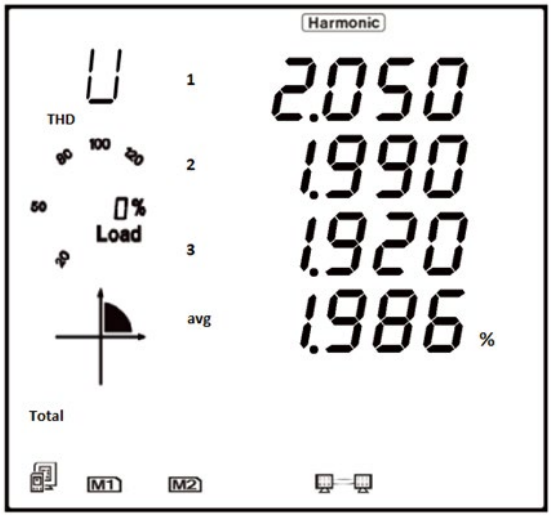

Figure 3-25 Harmonic Distortion Reading

3.5.2 Individual Harmonic Data

While in harmonic mode, press ***V/A*** to switch from the THD parameters to the individual harmonic data display.

In the harmonic data display, the harmonic order will increment by one each time ***P*** is pressed and will return to the 2nd Harmonic when ***P*** is pressed at the 63rd harmonic. The harmonic order will decrement by one each time ***E*** is pressed and will return to the 63rd when ***E*** is pressed at the 2nd harmonic.

Press ***V/A*** to switch the display between voltage harmonics and current harmonics.

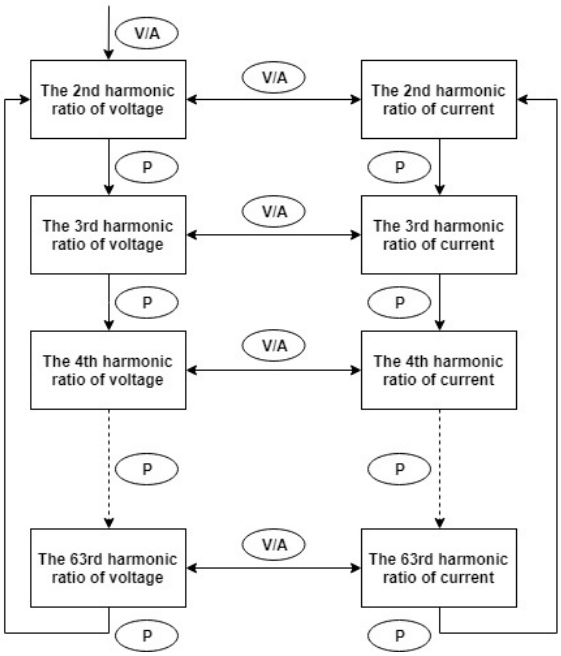

Figure 3-26 Individual Harmonic Data Screen Sequence

NOTE: The figure shows the rolling screen sequence when pressing P. If the E key is pressed, the sequence direction will be reversed. When the meter is set to 1LN, only phase A will be displayed for voltage and current harmonic magnitudes. When the meter is set to 1LL, phase C will not be displayed for voltage and current harmonic magnitudes.

Figure 3-27 shows the 5th order harmonic readings for current: Phase A is 12.35%, Phase B is 4.940%, and Phase C is 7.541%.

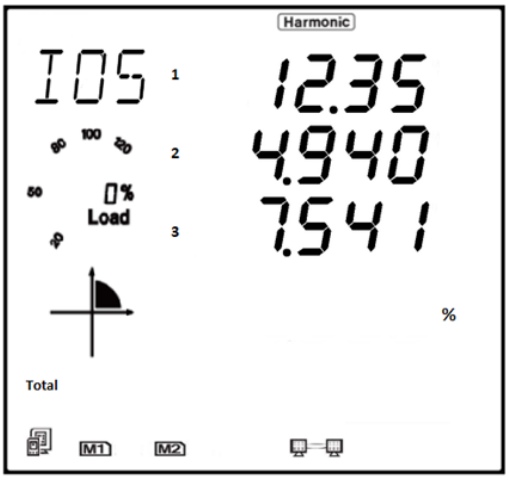

Figure 3-27 Individual Harmonic Reading

3.6 Expanded I/O Module Data

To view the data from the expanded I/O modules press ***H*** and ***V/A*** keys simultaneously for about one second and release, the screen will go blank, and the cursor will be flashing. Press either ***P*** or ***E*** key to move the cursor right or left until ***Digital I/O*** is selected, then press ***V/A*** to view the I/O data.

In the expanded I/O module data mode, the meter displays the data from the expanded I/O modules such as the DI status, DI pulse counter, relay status, analog input, analog output.

In this mode the first page is the module selection. You can choose to view the available modules that are attached to the meter. If no expanded I/O modules are connected, the screen will display ***NO IO***.

3.6.1 Module Selection:

In the module selection screen, press ***P*** to move the cursor down to the next module on the list. The cursor will return to the top of the list when ***P*** is pressed while the last module is selected. If only one module is connected, pressing ***P*** will have no effect.

Press ***E*** to move the cursor direction upwards, and the cursor will skip to the last module when it reaches the top. If only one module is connected, pressing ***E*** will have no effect.

Press ***V/A*** to select the module and enter the I/O module data selection mode.

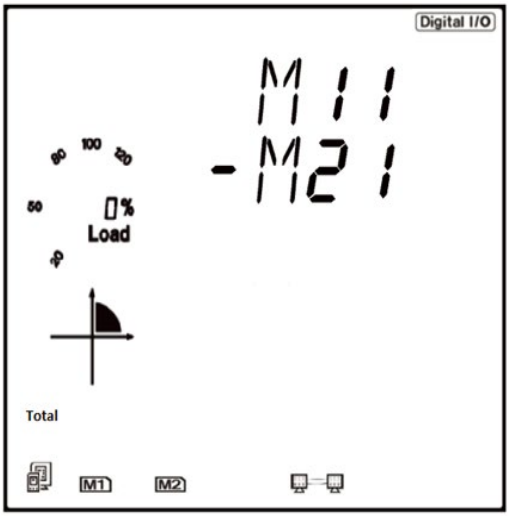

Figure 3-28 Module Selection Screen

Distributed by MicroDAQ, LLC
(603) 746-5524
www.microdaq.com
ACCUENERGY
www.accuenergy.com

As shown in figure 3-28, AXM-IO1-1 and AXM-IO2-1 I/O modules are connected and indicated by M11 and M21 respectively. The cursor in the figure points to M21. The following table lists all the I/O modules and the associated codes.

Table 3-3 IO Module Representation

Code	Module
M11	AXM-IO1-1
M12	AXM-IO1-2
M21	AXM-IO2-1
M22	AXM-IO2-2
M31	AXM-IO3-1
M32	AXM-IO3-2

I/O Module Data Display

In the I/O Module Data selection screen, press ***P*** to move the cursor downwards to the next parameter, and the cursor will return to the top parameter when it reaches the bottom. Please note that there are three parameters for the AXM-IO1, three parameters for the AXM-IO2, and four parameters for the AXM-IO3.

Press ***E*** to move the cursor upwards. The cursor will skip to the bottom when it reaches the top.

Press ***V/A*** to select the parameter and enter the display of the data.

Press ***H*** to return to the module selection screen.

The following figures display the screen sequence for each I/O module supported on the Acuvim-L.

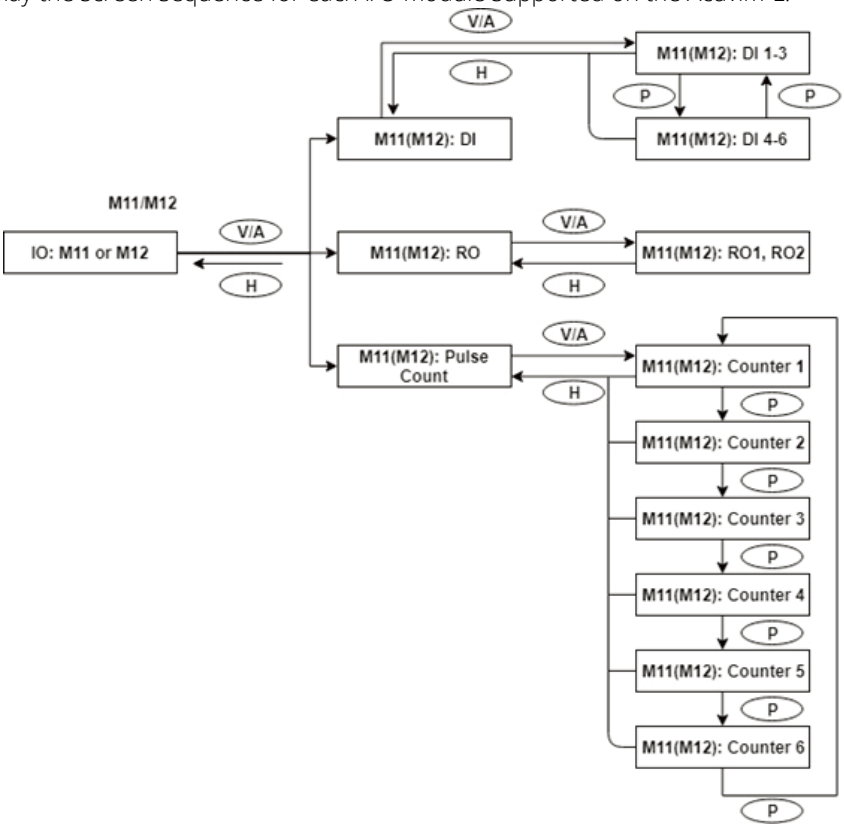

Figure 3-29 AXM-IO1 Data Display Screen Sequence

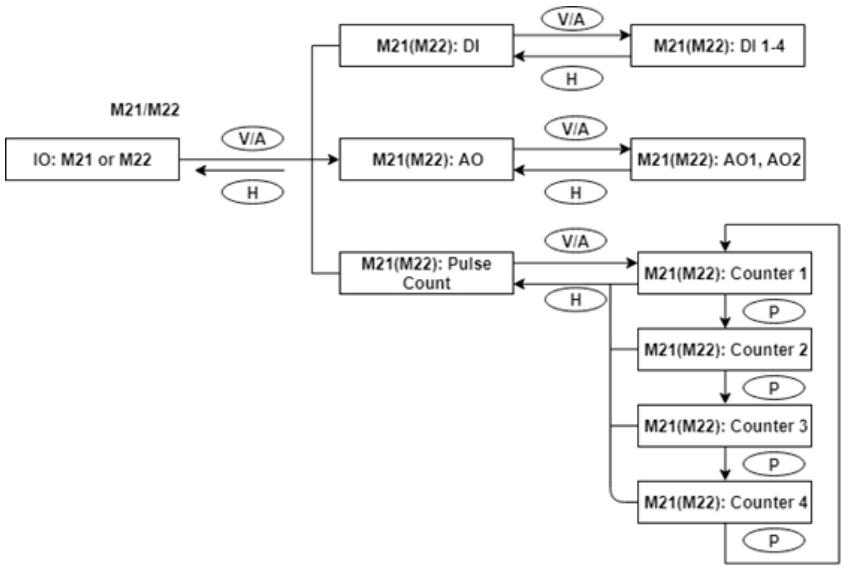

Figure 3-30 AXM-IO2 Data Display Screen Sequence

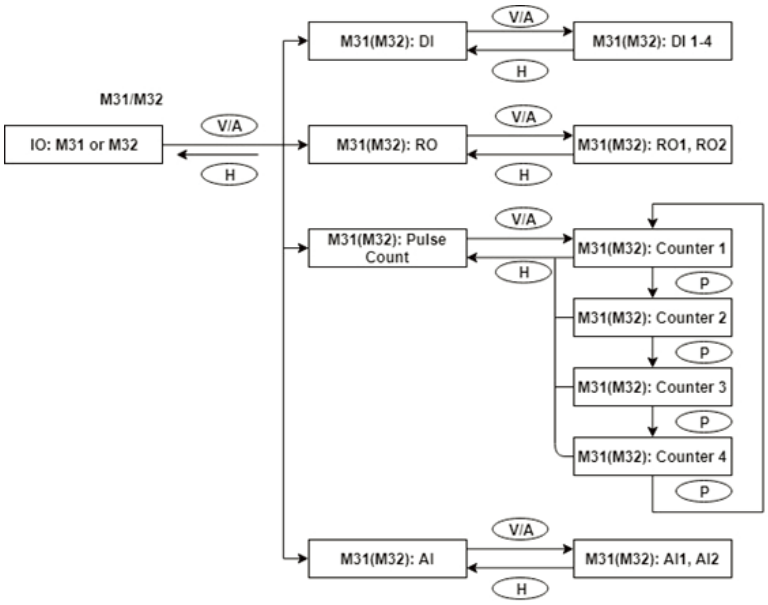

Figure 3-31 AXM-IO3 Data Display Sequence

3.7 Meter Setting Mode

In the settings mode, the system parameters, expanded I/O module parameters, alarm parameters, and communications module parameters can be read and modified. To access the settings mode, press ***H*** and ***V/A*** keys simultaneously for about one second and release, the screen will go blank, and the cursor will be flashing. Press either ***P*** or ***E*** key to move the flashing cursor over to select ***Setting*** and press ***V/A*** to enter the meter settings.

Distributed by MicroDAQ, LLC
(603) 746-5524
www.microdaq.com

3.7.1 Password Inquiry

To access the meter's settings, the user must enter a four-digit password. By default, the meter password is 0000. The following figure shows the password screen.

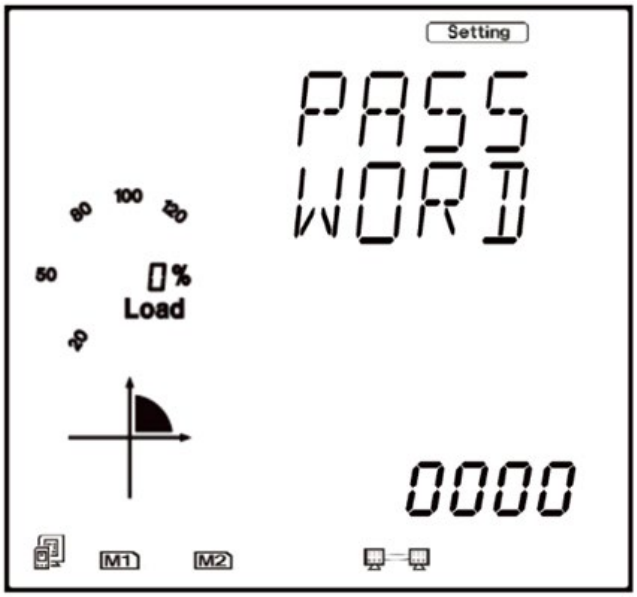

Figure 3-32 Password Inquiry Page

To input password:

- Press H to move the flashing cursor to the next position.
- Press P to increment the number by 1.
- Press E to decrement the number by 1.
- Press V/A to confirm the password.

NOTE: If the meter's password is unknown or forgotten, please contact Accuenergy Technical Support.

3.7.2 Parameter Selection Mode

Once the password has been entered correctly, there are four options to choose from in the parameter selection mode:

- System
- I/O
- NET
- Alarm

To navigate in the parameter selection mode, press ***P*** to move the cursor down to select the next item on the list. The cursor will return to the top of the list when it reaches the last item. Press E to move the cursor upwards. The cursor will skip to the bottom when it reaches the top. Press ***V/A*** to select and enter the setting.

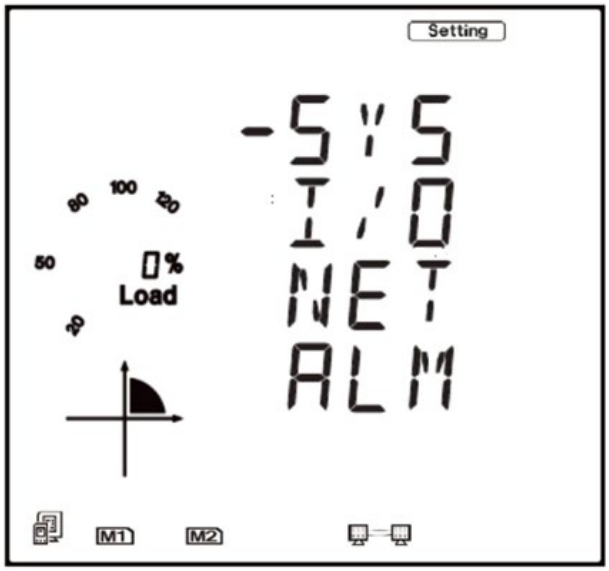

Figure 3-33 Parameter Selection Page

3.7.3 System Settings

Users can select and modify system parameters in the system parameter setting mode.

Key functions for selecting a parameter:

- The screen will roll to the next page each time ***P*** is pressed and will return to the first page when ***P*** is pressed at the last page.
- The screen will roll to the previous page each time ***E*** is pressed and will skip to the last page when ***E*** is pressed at the first page.
- Press ***V/A*** to modify the selected parameter.
- Press ***H*** to return to the parameter selection mode.

Key functions for modifying the parameter:

- Press ***H*** to move the flashing cursor to the next position.
- Press ***P*** to increment the number by 1.
- Press ***E*** to decrement the number by 1.
- Press ***V/A*** to confirm the modification and return to parameter selection mode.

The following figure shows the page sequence for the system parameter settings.

Distributed by MicroDAQ, LLC
(603) 746-5524
www.microdaq.com

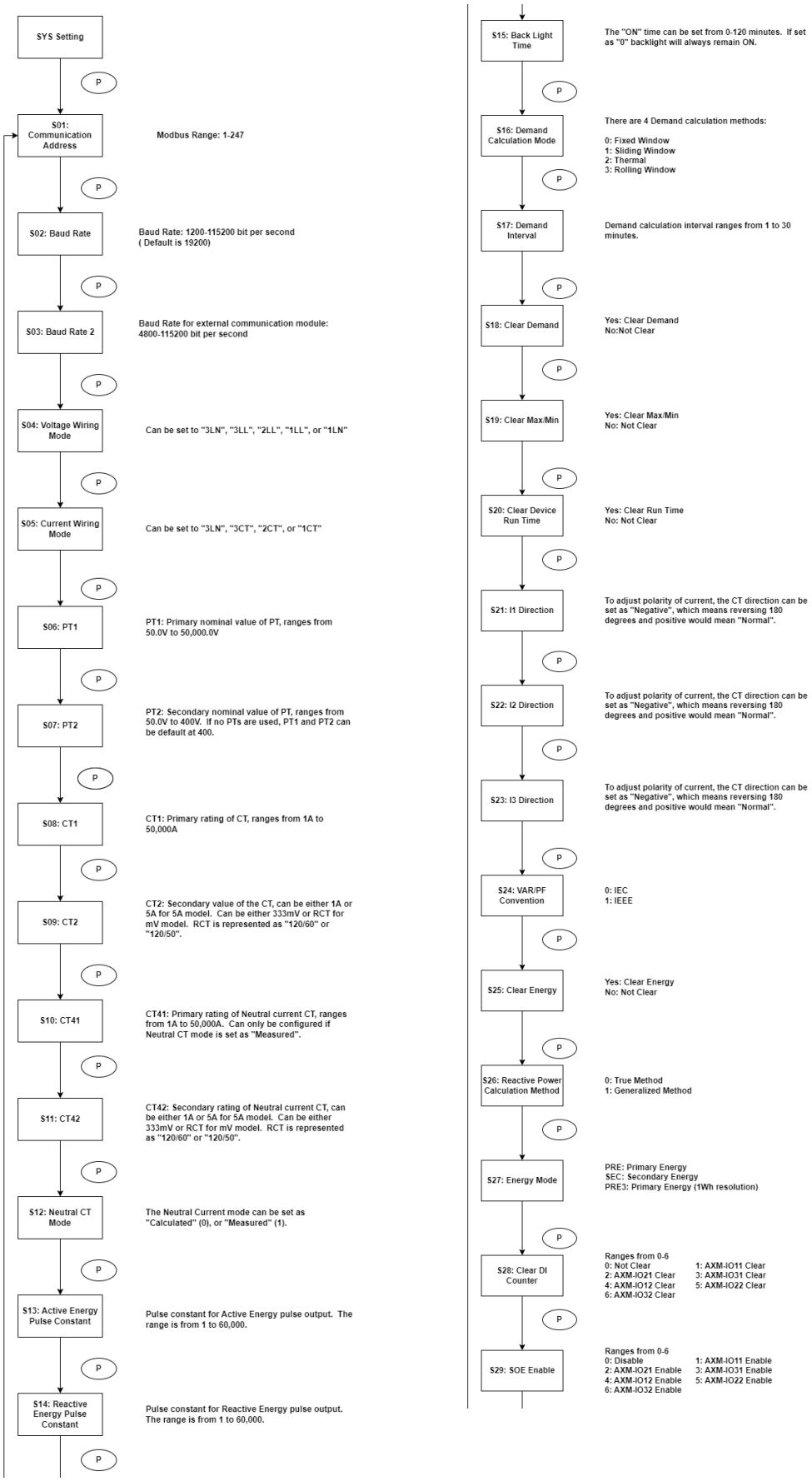

Distributed by MicroDAQ, LLC
(603) 746-5524
www.microdaq.com

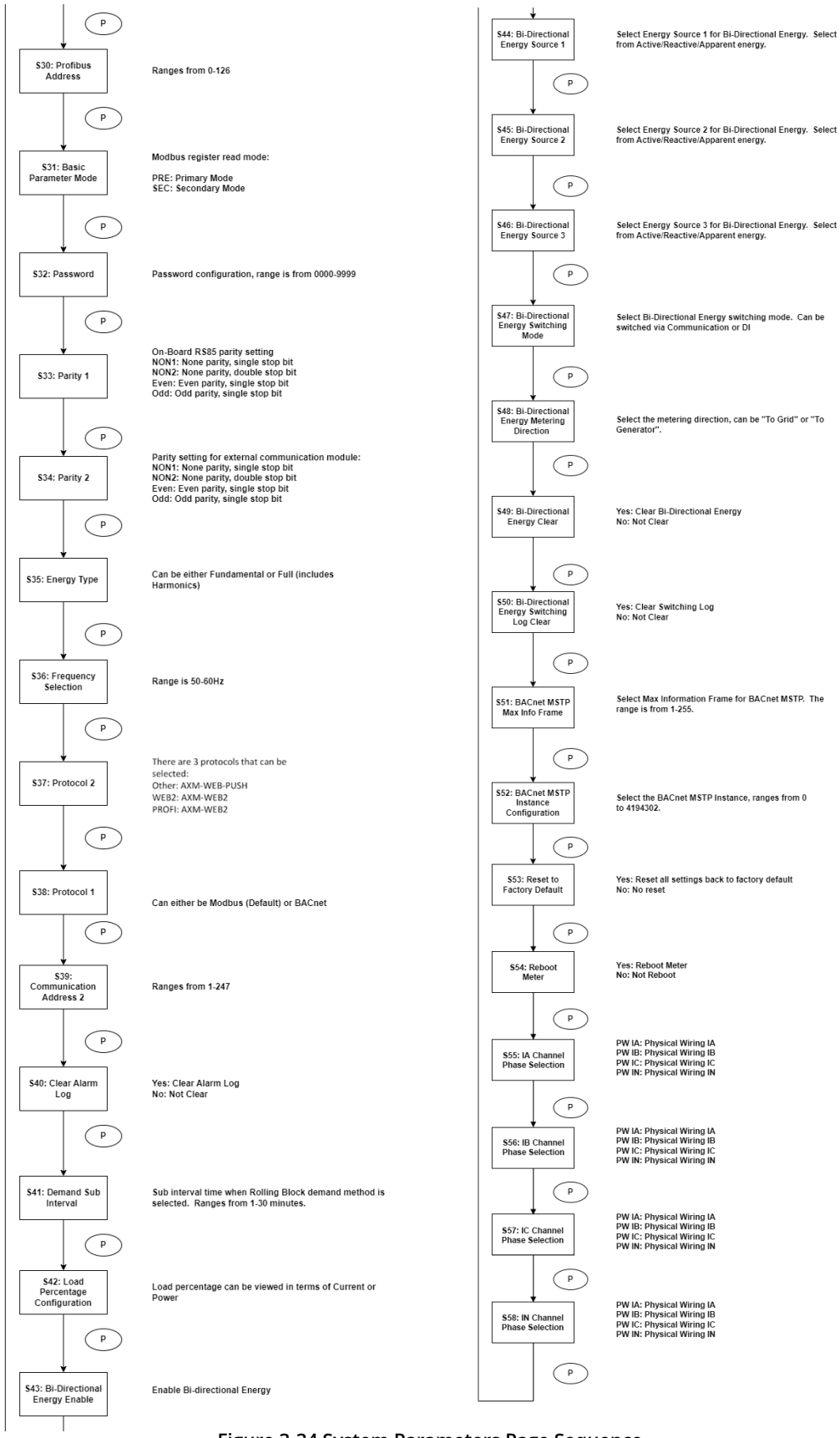

Figure 3-34 System Parameters Page Sequence

Distributed by MicroDAQ, LLC
(603) 746-5524
www.microdaq.com

3.7.4 I/O Module Settings

In the expanded I/O module parameter mode, there will be an option to view the available modules attached to the meter and modify parameters. If no expanded I/O modules are connected, the screen will display ***NO IO***. To return to the system parameter setting menu, press ***H***.

Key functions for I/O module selection:

- Press ***H*** to return to parameter selection mode.
- Press ***P*** to move the cursor down to select the next item. The cursor will return to the top when it reaches the bottom. If there is only one module connected, pressing ***P*** will have no effect.
- Press ***E*** to move the cursor up to select the previous item. The cursor will skip to the bottom when it reaches the top. If there is only one module connected, pressing ***E*** will have no effect.
- Press ***V/A*** to select the module and enter the I/O module parameter setting mode.

Key functions for modifying the parameter:

- Press ***H*** to move the flashing cursor to the next position.
- Press ***P*** to increment the number by 1.
- Press ***E*** to decrement the number by 1.
- Press ***V/A*** to confirm the modification and return to parameter selection mode.

The following figures show the sequence for the I/O module settings:

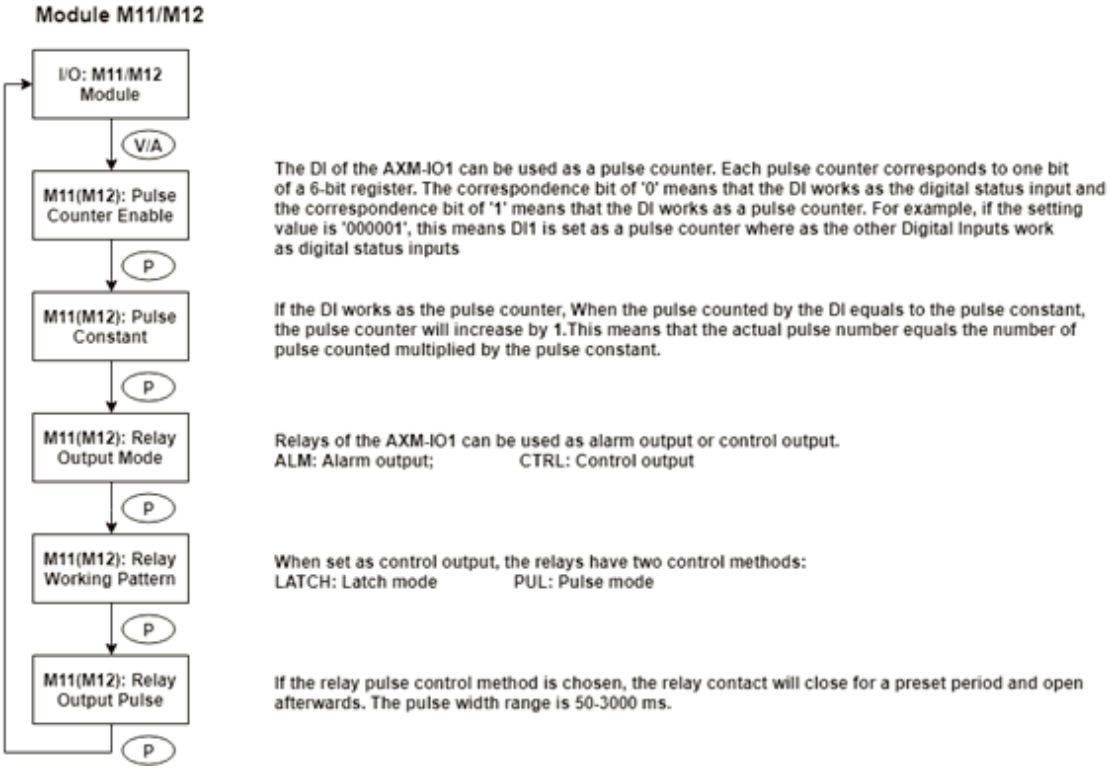

Figure 3-35 Screen sequence for AXM-IO11/IO12

Module M21/M22

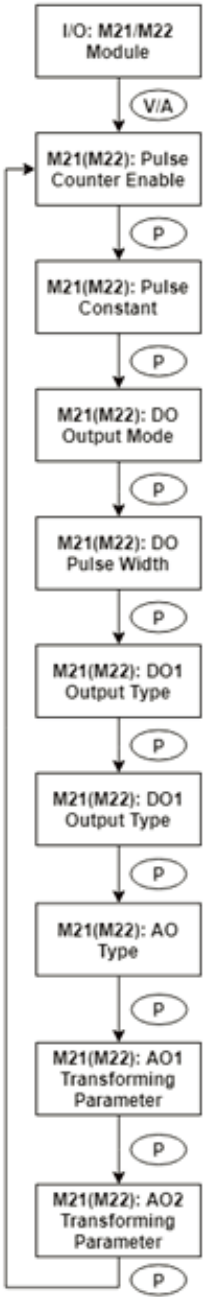

The DI of the AXM-IO2 can be used as a pulse counter. Each pulse counter corresponds to one bit of a 4-bit register. The correspondence bit of '0' means that the DI works as the digital status input and the correspondence bit of '1' means that the DI works as a pulse counter. For example, if the setting value is '0001', this means DI1 is set as a pulse counter where as the other Digital Inputs work as digital status inputs

If the DI works as the pulse counter, When the pulse counted by the DI equals to the pulse constant, the pulse counter will increase by 1.This means that the actual pulse number equals the number of pulse counted multiplied by the pulse constant.

DO of the AXM-IO2 can be used as alarm output or energy pulse output.
ALM: Alarm output; PUL: Energy pulse output

The pulse width range is from 20-1000 ms

Choose an output type for DO1:
0: No output 1: Import active energy
2: Export active energy 3: Import reactive energy
4: Export reactive energy

Choose an output type for DO2, follow the DO1 setup method.
If the DO type is selected as alarm output, DO1 DO2 output type parameter will have no effect.

The analog output types are:
0: 0-20 mA 1: 4-20 mA
2: 0-5 V 3: 1-5 V

For AO1 and AO2 transforming parameters:
Range: 0-29, please read chapter 5 for 'AO Transforming Parameter Settings' for more details.
When modifying AO parameter, AO input/output values reset to default.

Figure 3-36 Screen sequence for AXM-IO21/IO22

Distributed by MicroDAQ, LLC
(603) 746-5524
www.microdaq.com

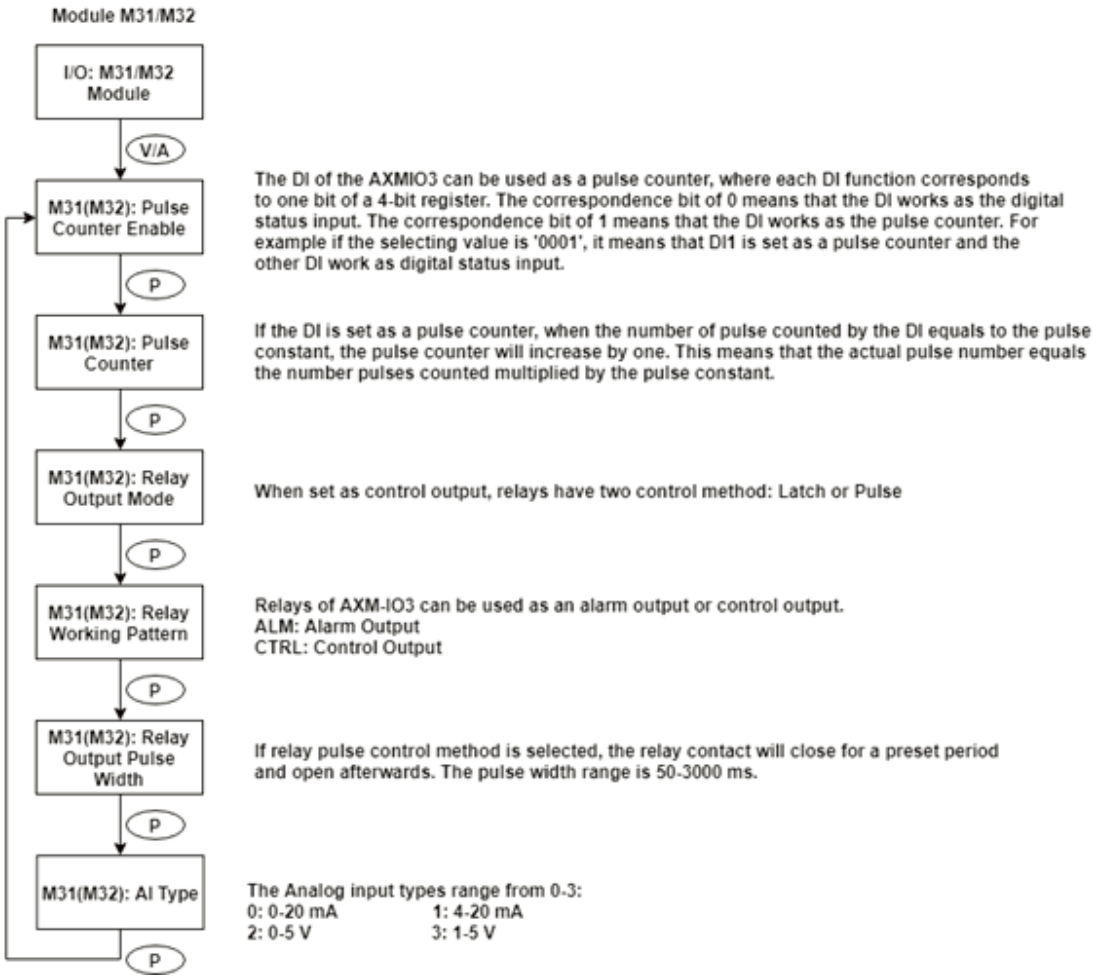

Figure 3-37 Screen sequence for AXM-IO31/IO32

NOTE: Figures 3-34 to 3-37 show the rolling screen sequence using the P key. If you are using the E key for scrolling across the pages, the sequence direction will be reversed.

3.7.5 Communications Module Settings

When the second communication protocol is set to ***OTHER,*** there will be pages displayed related to the AXM-RS485 module. The default second communication protocol setting is ***OTHER***.

When the second communication protocol is set to ***WEB2***, there will be pages displayed related to the AXM-WEB2 module.

When the second communication protocol is set to ***PROFI***, there will be pages displayed related to the AXM-PROFI module.

Key functions for finding the I/O module parameters:

- Press ***H*** to return to parameter selection mode.
- The screen will roll to the next page each time ***P*** is pressed and will return to the first page when ***P*** is pressed on the last page.
- The screen will roll to the previous page each time ***E*** is pressed and will skip to the last page when E is pressed at the first page.
- Press ***V/A*** to modify the selected parameter.

Key functions for modifying the module parameters:

- Press ***H*** to move the flashing cursor to the next position.
- Press ***P*** to increment the number by 1.
- Press ***E*** to decrement the number by 1.
- Press ***V/A*** to confirm the modification and return to parameter selection mode.

The following figures show the screen sequence for the supported communication protocols:

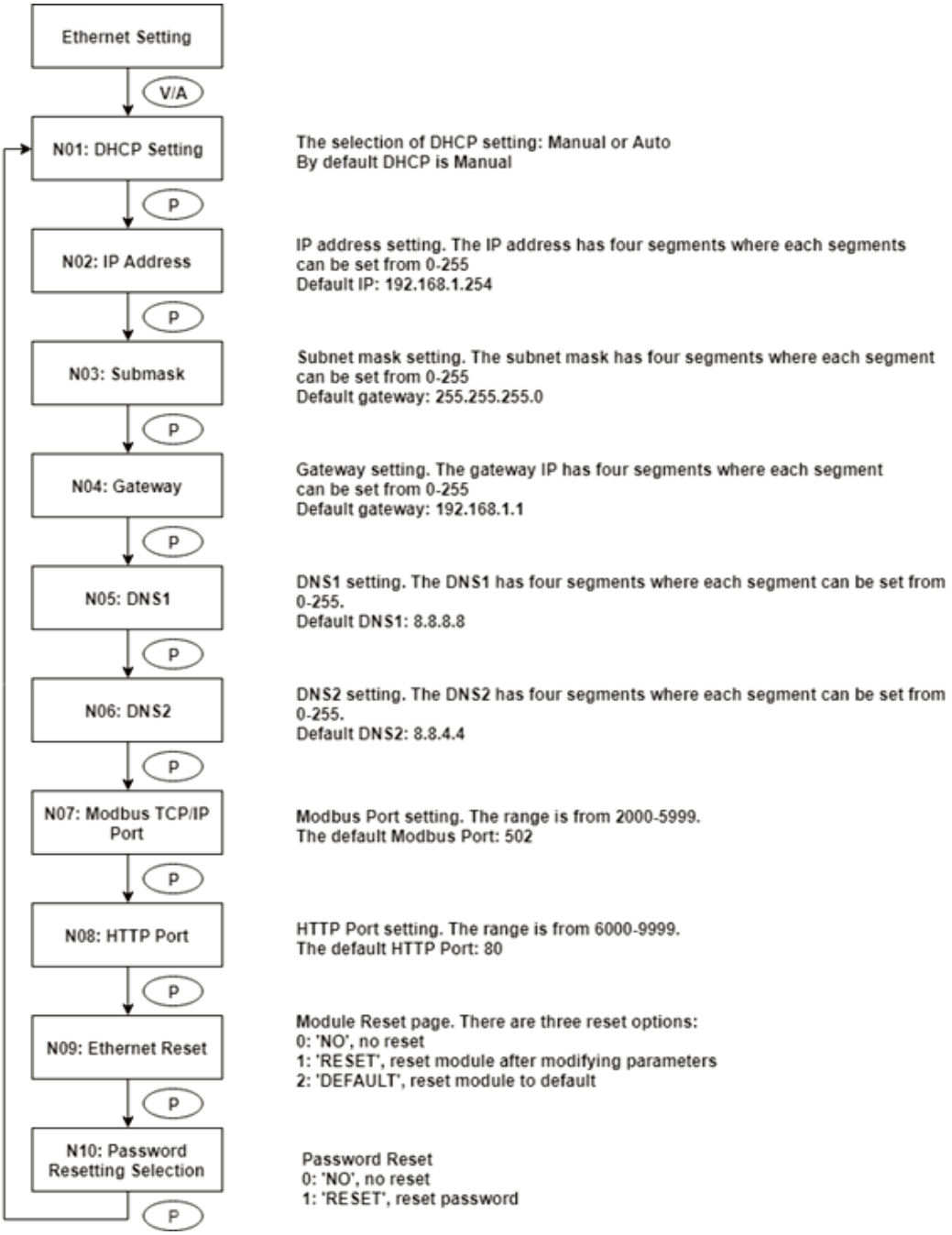

Figure 3-38 Ethernet Module Net settings Screen Sequence

NOTE: This figure shows the rolling screen sequence using the P key. If using the E key for rolling to the next page the sequence direction will be reversed.

Distributed by MicroDAQ, LLC
(603) 746-5524
www.microdaq.com

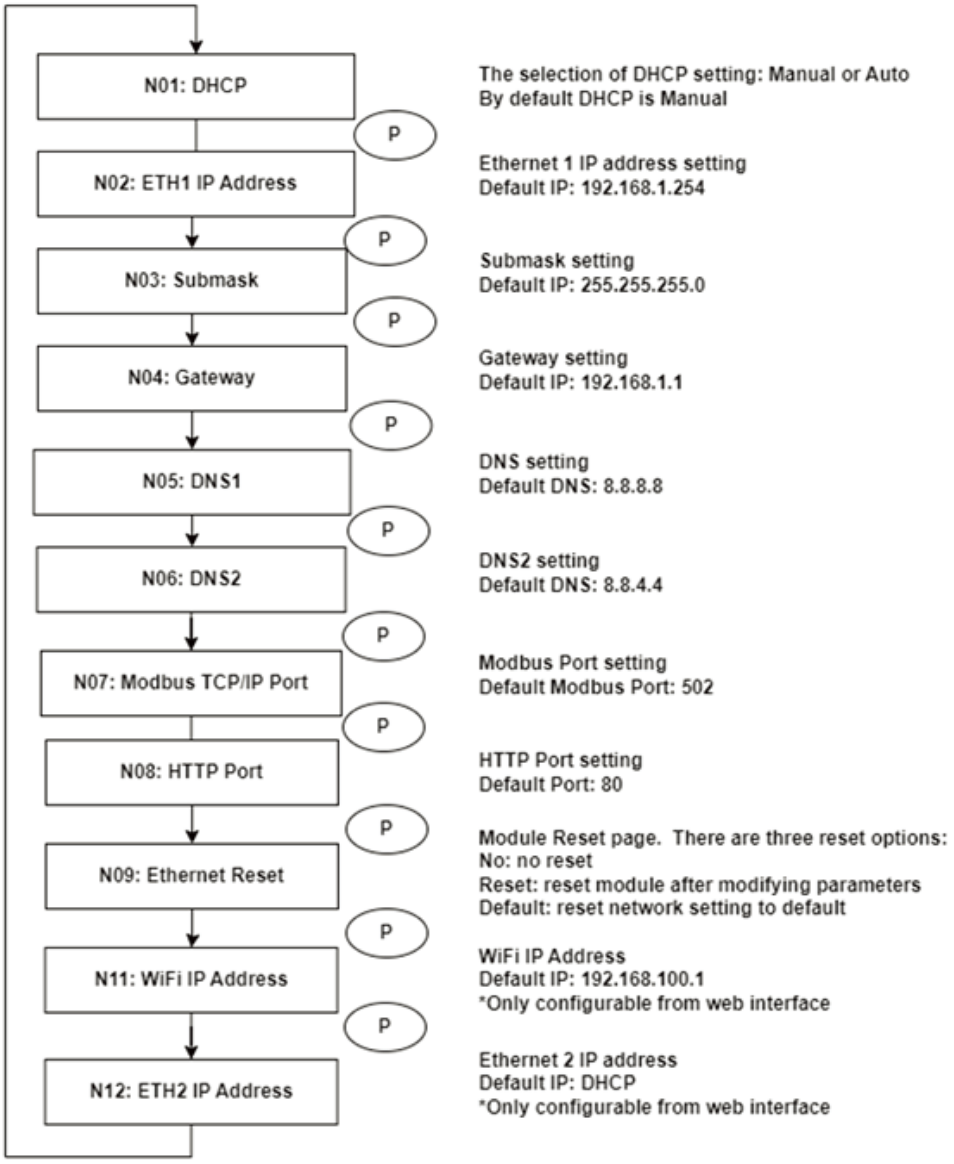

Figure 3-39 AXM-WEB2 Rolling Screen Sequence

3.7.6 Alarm Settings

In the alarm parameter mode, the parameters can be viewed and modified.

Key functions for finding the alarm parameter:

- Press ***H*** to return to parameter selection mode.
- The screen will roll to the next page each time ***P*** is pressed and will return to the first page when ***P*** is pressed on the last page.
- The screen will roll to the previous page each time ***E*** is pressed and will return to the last page when ***E*** is pressed at the first page.
- Press ***V/A*** to modify the selected parameter.

Key functions for modifying the parameter:

- Press ***H*** to move the flashing cursor to the next position.
- Press ***P*** to increment the number by 1.
- Press ***E*** to decrement the number by 1.
- Press ***V/A*** to confirm the modification and return to parameter selection mode.

The following figure shows the sequence:

Figure 3-40 Screen Sequence for Alarm Settings

3.8 Page Recovery Function

The Acuvim-L series meter includes a page recovery function. This instructs the meter to store the current display page information in the non-volatile memory upon power loss and reloads the page information when power is recovered. If power goes off when viewing under the parameter setting mode, the meter will show voltage displayed when the power is recovered. If power loss occurs when viewing under the expanded I/O module data mode, and if this expanded I/O module is not connected when power recovers, the meter will show the voltage display page instead.

Distributed by MicroDAQ, LLC
(603) 746-5524
www.microdaq.com

Chapter 4: Detailed Functions and Software

The Acuvim-L series meter contains advanced metering tools capable of measuring a multitude of power, energy and power quality parameters. Some advanced functions are not accessible directly from the meter front display; therefore, every meter can connect to the Acuview 2 software to access the information. This chapter introduces these functions and software.

4.1 Acuview 2 Software

The Acuview 2 software is a free data logging software that can be used to read the meters data, as well as configure and view settings. This software is free to download at ***www.accuenergy.com***.

The software uses the Modbus protocol to communicate with the meter. Users can connect to the software via the built-in RS485 communication port or by Modbus TCP communications module.

Please be aware the Acuview 2 software is only compatible with devices running firmware versions 6.15 and above.

4.1.1 Connecting using RS485

The meter's RS485 communication port can be used to connect to the software using an RS485-to-USB converter. The RS485 port on the meter has three terminals where 14 is labelled A (Positive), terminal 15 is B (Negative), and terminal 16 is S (Shield). The communication port uses half-duplex two-wire RS485 communication where the data is passed in one direction at a time, and the send (TX) and receive (RX) signals are shared between the two wires.

The figure below depicts how the RS485-USB converter should be wired into the meter, the T/R+ on the converter connected to terminal 14(A) on the Acuvim-L meter, and T/R- on the converter connected to terminal 15(B) on the meter.

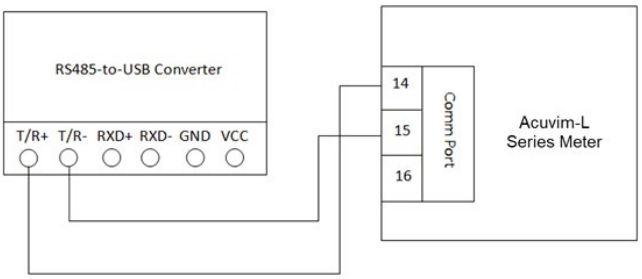

Figure 4-1 RS485-USB Converter Connection to Acuvim-L Meter

Once the physical wiring is connected between the converter cable and the Acuvim-L meter, the meter's communication settings need to be confirmed. The communication settings in this case scenario are the meter's Modbus device address (slave ID), the communication speed or baud rate, and the parity. By default, the meter has the following communication settings:

- **Modbus Device Address**: 1
- **Baud Rate:** 19200
- **Parity:** Non1 (no parity, 1 stop bit)

NOTE: If users are connecting to a meter with no display (DIN rail mount model), the default baud rate of the meter is 9600 on the first power up. After one minute of being powered, the default baud rate will change to 19200.

The COM port must then be confirmed on the computer that is being used to connect to the meter. To determine the COM port that is assigned, open the Microsoft Windows Device Manager on the computer. Under the ***Port (COM & LPT)*** heading, find the COM port number. For example, in the figure below, COM4 has been assigned to the RS485-USB converter. Note the COM port number as it is required to connect to the software.

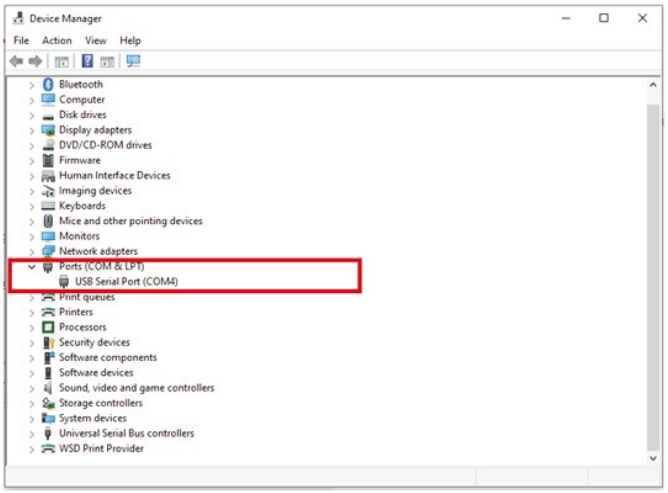

Figure 4-2 COM Port Number Assigned to USB Converter

Open the **Acuview 2** software, the following Connection screen will appear where users can either select the meter from the list for connection or add a new meter.

To add a new meter, click on the **Add** button, then the Add Device page will appear where users will have to input the necessary information required for establishing communication.

In the Meter section, specify the name for the meter, choose **AcuvimL-V4** as meter model from the drop-down menu, and select **Modbus RTU** as the Connect Way. In the Connection section, users can configure the Timeout and Scan Rate. Both Timeout and Scan Rate can be left at the default values of 2000ms.

Proceeding to the Modbus RTU section, enter the Com Number assigned to the USB converter cable (as found in the Device Manager), along with specifying the Slave Address, Baud Rate, and Parity settings for the meter.

Click on **Save** after all settings have been completed, and the meter will be successfully added to the list.

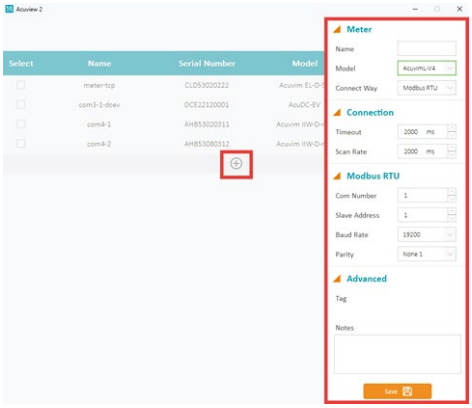

Figure 4-3 Creating New Connection on the Acuview 2 Software

Once the desired meter has been successfully added to the software, the connection can be established by selecting the meter and clicking on the **Connect** button located in the upper right corner of the screen, and the meter should automatically connect to the software.

Distributed by MicroDAQ, LLC
(603) 746-5524
www.microdaq.com

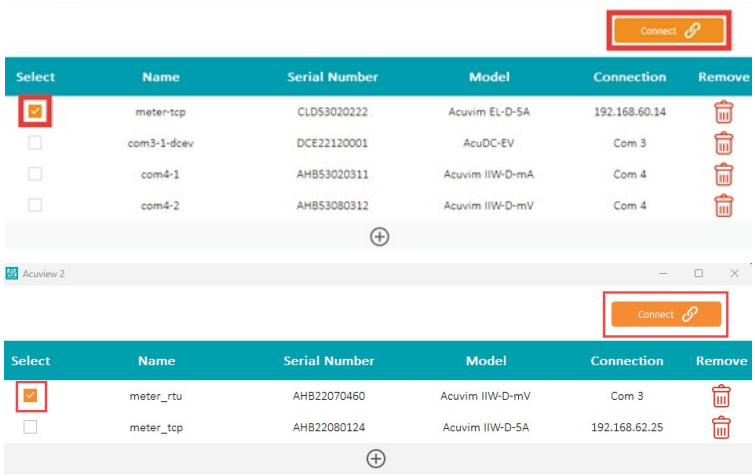

Figure 4-4 Adding Acuvim-L Device to the Acuview 2 Software

Users should observe data appearing on the main screen of the Acuview 2 software once the meter is connected successfully. If the meter does not automatically connect, click on the **Connection** menu, and select **Connect**.

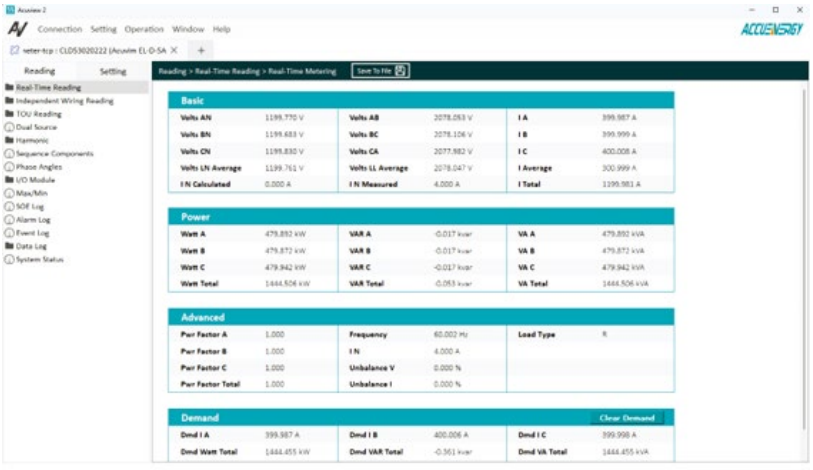

Figure 4-5 Acuview 2 Software Interface After Connected to the Meter Successfully

NOTE: For methods on how to connect to the software using Modbus TCP via communication module, please refer to the AXM-WEB2 User Manual which can be found on our website www.accuenergy.com.

4.2 Real-time Analog Measurements

The Acuview 2 software allows users to view all real-time analog measurements with high accuracy.

The real-time parameters that the meter can measure include voltage, current, power, frequency, power factor, demand and other data.

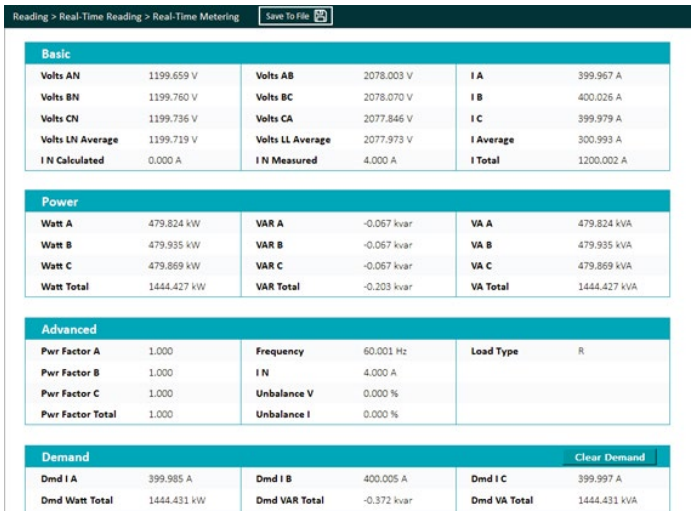

Figure 4-6 Real-Time Metering

4.2.1 High Speed Metering

The Acuvim-L V4 model supports High Speed Monitoring.

In the Acuview 2 software, users can access the high-speed parameter readings as a reference. The high-speed data was updated on the meter with 20ms; the user could read through Modbus RTU at 20ms.

For more precise readings obtained at higher sampling rates, users can enable the Fast Read Mode using WEB2 and directly read from the corresponding Modbus registers. There are two available sampling rates: 100ms and 50ms. The high-speed parameters include most real-time parameters at the 100ms sampling rate, while at the 50ms sampling rate, the meter only supports voltage, current, total active/reactive power, and frequency. Once the desired sampling rate is selected, users can view the Modbus address corresponding to the high-speed parameters on the WEB2.

NOTE: Configure the Fast Read Mode using WEB2 will require the users to use AXM-WEB2 as the second communication protocol.

4.3 Demand

This meter can support demand measurements, consisting of power and current demand readings. The demand can be found in the real-time section as outlined in Figure 4-7 below.

The demand will be calculated using the demand calculation method configured in the meter. The calculation types include:

Fixed Block: The demand is calculated based on selecting the calculation period **(Window Interval)** between 1 to 30 minutes. The meter will calculate and update the demand values at the end of each calculation period.

Sliding Block: The demand is calculated based on the calculation period **(Window Interval)** between 1 to 30 minutes. The meter will average the energy accumulated within this time period and the demand value is updated every minute.

Thermal: The demand is calculated based on thermal response, used in thermal demand meters. This method uses a sliding window to update the demand value at the end of each calculation period **(Window Interval)**.

Rolling Block: The demand is based on selecting a calculation period **(Window Interval)** between 1 to 30 minutes, a sub interval (**Calculation Interval)**, and the demand value updated at each sub interval. The sub interval must be a factor of the calculation period. For example, with a calculation period of 15 minutes, the sub interval can be configured as 5 minutes.

The demand calculation type and interval can be configured in the meter settings on either the Acuview 2 software, which will be discussed in the software settings portion of this chapter, or from the front display of the meter (refer to Chapter 3 for accessing the demand settings).

Distributed by MicroDAQ, LLC
(603) 746-5524
www.microdaq.com

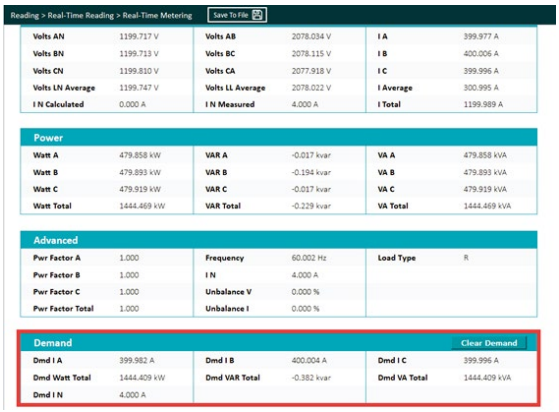

Reading > Real-Time Reading > Real-Time Metering | Save To File

Volts AN	1199.717 V	Volts AB	2078.034 V	I A	399.977 A
Volts BN	1199.713 V	Volts BC	2078.115 V	I B	400.006 A
Volts CN	1199.810 V	Volts CA	2077.918 V	I C	399.996 A
Volts LN Average	1199.747 V	Volts LL Average	2078.022 V	I Average	300.995 A
I N Calculated	0.000 A	I N Measured	4.000 A	I Total	1199.989 A

Power

Watt A	479.858 kW	VAR A	-0.017 kvar	VA A	479.858 kVA
Watt B	479.893 kW	VAR B	-0.194 kvar	VA B	479.893 kVA
Watt C	479.919 kW	VAR C	-0.017 kvar	VA C	479.919 kVA
Watt Total	1444.469 kW	VAR Total	-0.229 kvar	VA Total	1444.469 kVA

Advanced

Pwr Factor A	1.000	Frequency	60.002 Hz	Load Type	R
Pwr Factor B	1.000	I N	4.000 A		
Pwr Factor C	1.000	Unbalance V	0.000 %		
Pwr Factor Total	1.000	Unbalance I	0.000 %		

Demand | Clear Demand

Dmd I A	399.982 A	Dmd I B	400.004 A	Dmd I C	399.996 A
Dmd Watt Total	1444.409 kW	Dmd VAR Total	-0.382 kvar	Dmd VA Total	1444.409 kVA
Dmd I N	4.000 A				

Figure 4-7 Demand Readings

4.4 Energy

The Acuview 2 software allows users to view all energy measurements. The energy parameters that the meter can measure include active, reactive, and apparent energy in total as well as for individual phase and specific quadrant.

The Acuvim-L meter supports editing energy values, and this can be done via Acuview 2 software or Modbus. This is used to configure the meter to start accumulating from a certain energy value. However, it is important to note that the energy values cannot be written directly from the meter's display.

Energy Calculating Mode

1. Users can select different energy calculating modes, fundamental based or full-wave based, either from the meter-front or via communication. The fundamental based calculating is used to accumulate energy without taking harmonics into consideration, while the full-wave based calculating includes fundamental based plus harmonics.

NOTE: When fundamental based calculating mode is selected, the PF calculation will be based on the fundamental wave.

2. The energy reading can be set as either Primary or Secondary. The Primary displays the energy accumulation in terms of the Primary measurement, and the Secondary displays the energy accumulation in terms of the Secondary measurement with resolution of up to 1Wh. Users can configure this setting either with the keys from the meter-front (refer to chapter 3), or through Acuview 2 software or Modbus registers.

NOTE: Acuvim-L can display either primary energy or secondary energy on the LCD screen. However, it is only able to send out pulses as secondary energy from the AXM-IO module.

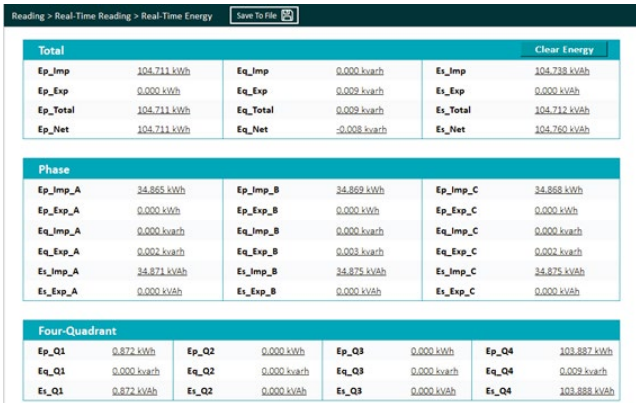

Reading > Real-Time Reading > Real-Time Energy | Save To File

Total | Clear Energy

Ep_Imp	104.711 kWh	Eq_Imp	0.000 kvarh	Es_Imp	104.738 kVAh
Ep_Exp	0.000 kWh	Eq_Exp	0.009 kvarh	Es_Exp	0.000 kVAh
Ep_Total	104.711 kWh	Eq_Total	0.009 kvarh	Es_Total	104.712 kVAh
Ep_Net	104.711 kWh	Eq_Net	-0.008 kvarh	Es_Net	104.760 kVAh

Phase

Ep_Imp_A	34.865 kWh	Ep_Imp_B	34.869 kWh	Ep_Imp_C	34.868 kWh
Ep_Exp_A	0.000 kWh	Ep_Exp_B	0.000 kWh	Ep_Exp_C	0.000 kWh
Eq_Imp_A	0.000 kvarh	Eq_Imp_B	0.000 kvarh	Eq_Imp_C	0.000 kvarh
Eq_Exp_A	0.002 kvarh	Eq_Exp_B	0.003 kvarh	Eq_Exp_C	0.002 kvarh
Es_Imp_A	34.871 kVAh	Es_Imp_B	34.875 kVAh	Es_Imp_C	34.875 kVAh
Es_Exp_A	0.000 kVAh	Es_Exp_B	0.000 kVAh	Es_Exp_C	0.000 kVAh

Four-Quadrant

Ep_Q1	0.872 kWh	Ep_Q2	0.000 kWh	Ep_Q3	0.000 kWh	Ep_Q4	103.887 kWh
Eq_Q1	0.000 kvarh	Eq_Q2	0.000 kvarh	Eq_Q3	0.000 kvarh	Eq_Q4	0.009 kvarh
Es_Q1	0.872 kVAh	Es_Q2	0.000 kVAh	Es_Q3	0.000 kVAh	Es_Q4	103.888 kVAh

Figure 4-8 Energy Readings

4.5 Max/Min

Acuvim-L series meter logs maximum and minimum value statistics for all real-time demand, and THD parameters as well as the time that it occurred. All data is stored in non-volatile memory so all statistical information can be preserved even when the meter loses power or gets shut off. All maximum and minimum data can be accessed either via communication or from the meter front. However, time stamps information can only be accessed via communication.

Statistical data can be cleared via communication or from the meter front.

Reading > Max/Min Save To File Reset Max/Min

Max / Min

Channel	Maximum	Time Stamp	Minimum	Time Stamp
Volts AN	300.799 V	2023-09-21 12:44:58	0.000 V	2023-09-18 15:00:13
Volts BN	300.186 V	2023-09-21 12:43:57	0.000 V	2023-09-18 15:00:13
Volts CN	300.132 V	2023-09-21 12:44:30	0.000 V	2023-09-18 15:00:13
Volts AB	525.587 V	2023-09-21 12:44:11	0.000 V	2023-09-18 15:00:13
Volts BC	535.991 V	2023-09-21 12:43:48	0.000 V	2023-09-18 15:00:13
Volts CA	519.488 V	2023-09-21 12:44:11	0.000 V	2023-09-18 15:00:13
I A	27.543 A	2023-09-21 14:00:03	0.000 A	2023-09-18 15:00:13
I B	27.542 A	2023-09-21 14:00:03	0.000 A	2023-09-18 15:00:13
I C	27.542 A	2023-09-21 14:00:03	0.000 A	2023-09-18 15:00:13
Watt Total	22.437 kW	2023-09-21 12:44:40	-1.558 kW	2023-09-19 14:42:14
VAR Total	5.747 kvar	2023-09-21 11:47:51	-7.789 kvar	2023-09-21 13:01:55
VA Total	22.437 kVA	2023-09-21 12:44:40	0.000 kVA	2023-09-18 15:00:13
Pwr Factor Total	1.000	2023-09-18 11:39:01	-0.866	2023-09-19 14:42:25

Figure 4-9 Max and Min Readings

4.6 Harmonics and Power Quality Analysis

4.6.1 Harmonics & THD

Acuvim-L series meter can measure and analyze several power quality parameters, which is useful for further analysis of the voltage and current signals.

Total Harmonic Distortion: A ratio of the sum of powers in all harmonic components to power of the fundamental frequency. The Acuvim-L meter also supports even and odd order THD, where even order harmonics are 2nd, 4th, 6th, and so on, and odd order harmonics are 3rd, 5th, 7th, and so on.

Crest Factor: The ratio between either the peak current or voltage and the RMS value.

THFF: Stands for Telephone Harmonic Form Factor and is the ratio of the square root of the sum of the squares for all the sine wave components (including both fundamental and harmonic alternating current waves) to the RMS value of the entire wave form.

K Factor: A measure of the heating effect caused by current harmonics, which helps determine the linearity of a load. A K factor value of 1 indicates that the load is linear, and there are no harmonics present. However, a K factor value greater than one means that the load is not linear, and there is a higher heating effect caused by the harmonics in the system.

Harmonics are essentially high frequency waveforms that are combined with or superimposed over the fundamental frequency. The fundamental frequency is the circuit frequency which is 50 or 60Hz depending on the system that is being monitored. The Acuvim-EL meter supports individual voltage and current harmonics up to the 63rd order. This means that the meter can monitor the percentage of harmonics present up to the 63rd order (63 times the fundamental frequency). Similarly, Acuvim-CL meter supports individual voltage and current harmonics up to the 31st order. This provides users with an in depth examination of the power quality for the system they are monitoring.

Distributed by MicroDAQ, LLC
(603) 746-5524
www.microdaq.com

Reading > Harmonic > THD Save To File

Total			
THD Volts AN/AB	0.020 %	THD I A	0.010 %
THD Volts BN/CA	0.010 %	THD I B	0.010 %
THD Volts CN/BC	0.010 %	THD I C	0.010 %
THD Volts Average	0.010 %	THD I Average	0.010 %

Voltage					
Odd THD V A	0.010 %	Odd THD V B	0.000 %	Odd THD V C	0.000 %
Even THD V A	0.010 %	Even THD V B	0.010 %	Even THD V C	0.010 %
THFF V A	0.030 %	THFF V B	0.020 %	THFF V C	0.030 %
Crest Factor V A	1.415	Crest Factor V B	1.415	Crest Factor V C	1.415

Current					
Odd THD V A	0.010 %	Odd THD I B	0.010 %	Odd THD I C	0.010 %
Even THD I A	0.000 %	Even THD I B	0.010 %	Even THD I C	0.000 %
K Factor I A	1.000	K Factor I B	1.000	K Factor I C	1.000

Figure 4-10 THD Reading

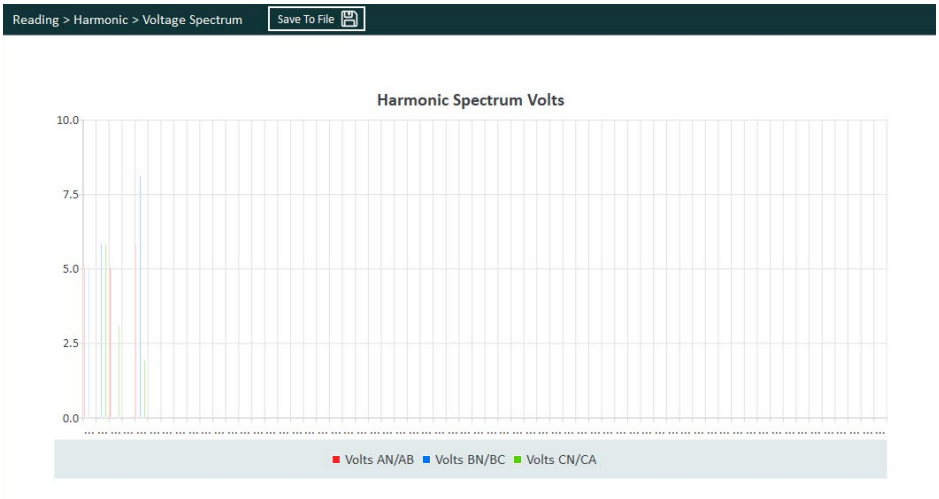

Figure 4-11(a) Harmonic Voltage Spectrum

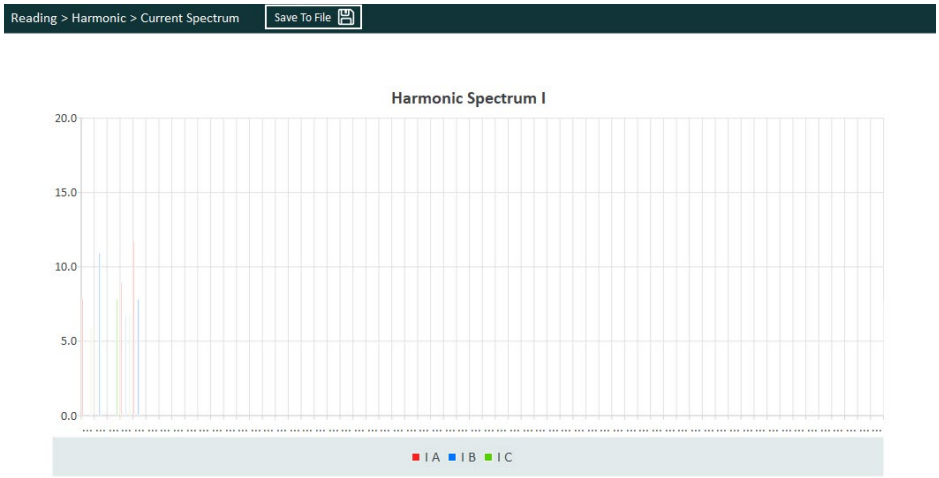

Figure 4-11(b) Harmonic Current Spectrum

4.6.2 Amplitude and Angle

This section provides users with the amplitude and phase angle details of the harmonics being measured by the meter. For example, if the voltage input to the meter is 120V and there is a harmonic reading of 10% for the 2nd order harmonic, the amplitude in this case

will show 12V. Both voltage harmonics and current harmonic amplitude/angles can be viewed. Users can view from the 2nd to 63rd order by horizontally scrolling on the software screen.

Reading > Harmonic > Voltage Amplitude/Angle Save To File

Volts AN/AB

Channel	2nd	3rd	4th	5th	6th	7th	8th	9th	10th	11th	12th	13th
Harmonic Amplitude	2.900 V	0.000 V	2.800 V	0.000 V	3.300 V	0.000 V	0.000 V	0.000 V	0.000 V	0.000 V	0.000 V	0.000 V
Harmonic Angle	180.800 °	0.000 °	98.000 °	0.000 °	183.100 °	0.000 °	0.000 °	0.000 °	0.000 °	0.000 °	0.000 °	0.000 °

Volts BN/BC

Channel	2nd	3rd	4th	5th	6th	7th	8th	9th	10th	11th	12th	13th
Harmonic Amplitude	2.800 V	3.300 V	0.000 V	0.000 V	4.600 V	0.000 V	0.000 V	0.000 V	0.000 V	0.000 V	0.000 V	0.000 V
Harmonic Angle	224.700 °	208.400 °	0.000 °	0.000 °	153.100 °	0.000 °	0.000 °	0.000 °	0.000 °	0.000 °	0.000 °	0.000 °

Volts CN/CA

Channel	2nd	3rd	4th	5th	6th	7th	8th	9th	10th	11th	12th	13th
Harmonic Amplitude	0.000 V	3.300 V	1.700 V	0.000 V	1.100 V	0.000 V	0.000 V	0.000 V	0.000 V	0.000 V	0.000 V	0.000 V
Harmonic Angle	0.000 °	169.000 °	266.000 °	0.000 °	315.000 °	0.000 °	0.000 °	0.000 °	0.000 °	0.000 °	0.000 °	0.000 °

Figure 4-12(a) Voltage Amplitude/Angle

Reading > Harmonic > Current Amplitude/Angle Save To File

I A

Channel	2nd	3rd	4th	5th	6th	7th	8th	9th	10th	11th	12th	13th
Harmonic Amplitude	0.075 A	0.000 A	0.000 A	0.085 A	0.115 A	0.000 A	0.000 A	0.000 A	0.000 A	0.000 A	0.000 A	0.000 A
Harmonic Angle	178.900 °	0.000 °	0.000 °	188.400 °	328.200 °	0.000 °	0.000 °	0.000 °	0.000 °	0.000 °	0.000 °	0.000 °

I B

Channel	2nd	3rd	4th	5th	6th	7th	8th	9th	10th	11th	12th	13th
Harmonic Amplitude	0.000 A	0.105 A	0.000 A	0.065 A	0.075 A	0.000 A	0.000 A	0.000 A	0.000 A	0.000 A	0.000 A	0.000 A
Harmonic Angle	0.000 °	358.900 °	0.000 °	358.500 °	178.200 °	0.000 °	0.000 °	0.000 °	0.000 °	0.000 °	0.000 °	0.000 °

I C

Channel	2nd	3rd	4th	5th	6th	7th	8th	9th	10th	11th	12th	13th
Harmonic Amplitude	0.055 A	0.000 A	0.075 A	0.065 A	0.000 A	0.000 A	0.000 A	0.000 A	0.000 A	0.000 A	0.000 A	0.000 A
Harmonic Angle	179.000 °	0.000 °	178.700 °	358.500 °	0.000 °	0.000 °	0.000 °	0.000 °	0.000 °	0.000 °	0.000 °	0.000 °

Figure 4-12(b) Current Amplitude/Angle

4.6.3 Phase Angles

Phase angle indicates the angle between phase A voltage and other voltage/current parameters, measured in a range from 0 to 360 degrees. These readings allow for the analysis of the phase angle difference between each phase and also determine if current/voltage are incorrectly out of phase, which tend to be related to wiring/installation issues with the meter.

- When the wiring is set to 2LL or 3LL, the meter provides the phase angles of V BC, V CA, I A, I B, I C corresponding to V AB (reference angle).
- When the wiring is set to 3LN, the phase angles are V BN, V CN, I A, I B and I C where V AN is the reference angle.
- When the wiring is set to 1LL, the meter has phase angle of V BN, I A, I B where V AN is the reference angle.

The phase angle readings from the Acuview 2 software are shown in Figure 4-13. The image provides the phase angle reading of a three-phase four-wire system (3LN), where the three-phase voltage is 120 degrees apart. The current phase angle for three-phase four-wire balanced systems is usually aligned with the voltage phase angles.

Distributed by MicroDAQ, LLC
(603) 746-5524
www.microdaq.com

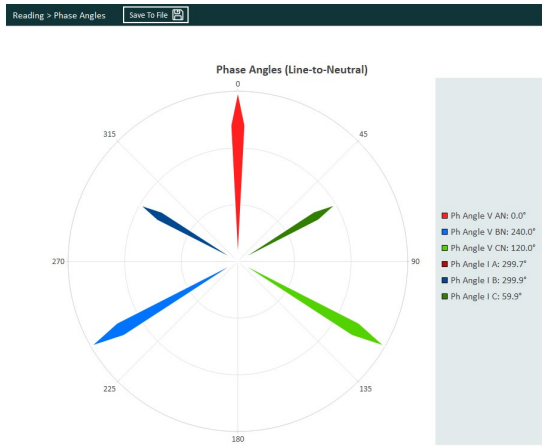

Figure 4-13 Phase Angle Diagram & Readings

4.6.4 Sequence Component and Unbalance Analysis

Acuvim-L series meter can perform sequential analysis for the input signal. The sequence components allow users to represent three-phase systems as individual three single-phase networks, where these networks represents the positive sequence, negative sequence, and zero sequence.

Positive Sequence: Three phasors of the positive sequence are equal in magnitude and are angled 120 degrees apart. The phase rotation for positive sequence is when phase B lags behind phase A.

$$I_+ = \frac{1}{3} \times (I_a + aI_b + a^2 I_c)$$
$$V_+ = \frac{1}{3} \times (V_a + aV_b + a^2 V_c)$$
$$a = 1\angle 120°$$

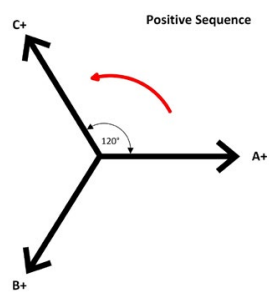

Figure 4-14 Positive Sequence Phasor Diagram

Negative Sequence: The negative phase-sequence phasors are equal in magnitude and angled 120 degrees apart. The main difference between the positive and negative sequence is the phase rotation. In the negative sequence, phase B leads phase A, whereas in the positive sequence, phase B lags behind phase A.

$$I_- = \frac{1}{3} \times (I_a + a^2 I_b + aI_c)$$
$$V_- = \frac{1}{3} \times (V_a + a^2 V_b + aV_c)$$
$$a = 1\angle 120°$$
$$a^2 = 1\angle 240$$

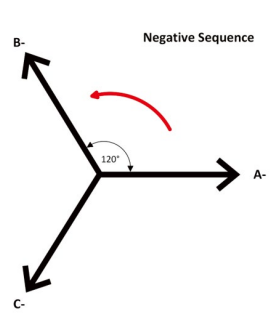

Figure 4-15 Negative Sequence Phasor Diagram

Zero Sequence: Combines a set of three phasors that are equal in magnitude and in-phase with each other. Unlike the positive sequence and negative sequence, there is no rotation associated with the zero sequence.

$$I_0 = \frac{1}{3} \times (I_a + I_b + I_c)$$

$$V_0 = \frac{1}{3} \times (V_a + V_b + V_c)$$

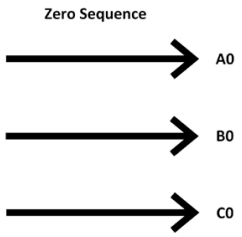

Figure 4-16 Zero Sequence Phasor Diagram

Unbalance Factor

The unbalance factor allows users to understand the percentage in which the voltage and current are unbalanced. The factor is a percentage of the ratio of the negative/zero sequence component to the positive sequence component. It indicates that the magnitude, as well as the phase angles, of the three-phase voltage/current are not equal. Figure 4-17 shows the unbalance and sequence component reading from the Acuview 2 software.

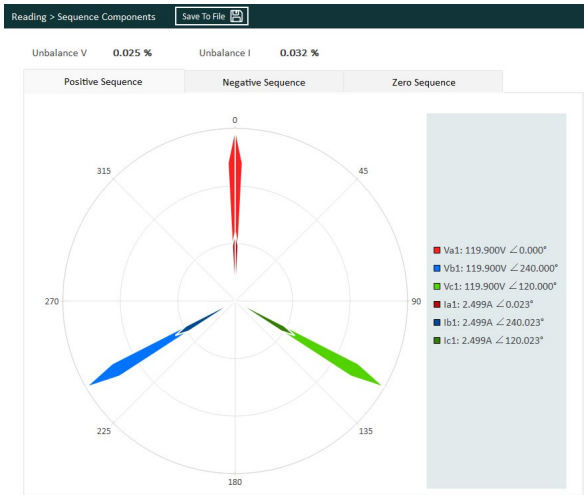

Figure 4-17 Unbalance and Sequence Component Reading

4.7 Alarm

Acuvim-L series meter supports an over/under limit alarm function. When the monitored parameter goes over or under the preset threshold and remains at the level over the preset time delay, the alarm will be triggered. The alarm can be configured directly from the meter display, the Acuview 2 software or Modbus communication.

The meter can have a maximum of 16 alarm channels configured. If the extended I/O modules are attached, the alarms can trigger different functions, such as a relay output or digital output, which can be used to activate downstream devices such as a beacon light or buzzer. There is an option to have the meter's display flash when an alarm is triggered, which provides users a visual cue that an alarm condition has been triggered.

Distributed by MicroDAQ, LLC
(603) 746-5524
www.microdaq.com

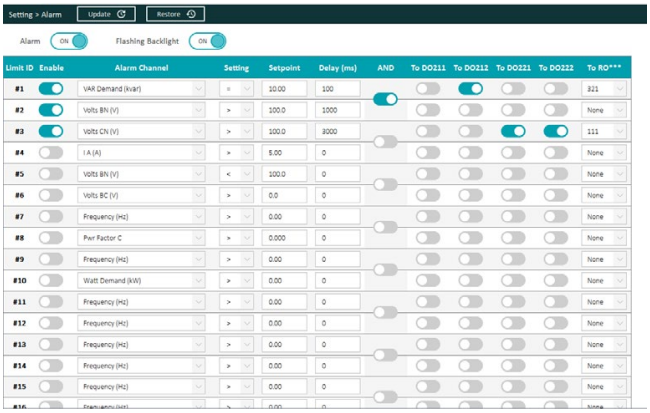

Figure 4-18 Alarm Setting

Before using the alarm function, alarm conditions such as logic dependency, target set point, and time delay must be correctly configured. Settings can be accessed and modified from the software via the communication connection as shown in Fig 4-18. To access the alarm settings from the meter display, refer to Chapter 3 for the screen sequence. To configure the alarms using Modbus refer to Chapter 6 to view the register list.

Alarm Channel/Parameter Code: Users can select the desired parameter from the drop-down menu for the alarm in the Alarm settings page. If setting the alarms using Modbus or from the meters display, enter the alarm code for the desired parameter The alarm code table can be found in table 4-3. For example, "0" represents frequency and "17" represents Total System Power.

Comparison Mode: Users can select three, different alarm conditions:

1. Greater than (>)

2. Equal to (=)

3. Less than (<)

For example, if you choose the target parameter to be "Frequency", condition to be "greater than", and set point to be "50", the alarm will be triggered when the frequency is greater than 50Hz and will come out of the alarm condition when the frequency is less than or equal to 50Hz.

Setpoint: The setpoint is the parameter value used in the alarm condition. It represents the threshold for triggering the alarm, whether it is below, under, or equal to the setpoint value of the parameter.

Delay Time: If the alarm's condition lasts over the preset delay time period, the alarm signal will activate. The delay range is from 0 to 30000 (unit: ms). If it is set to 200, there will be a 200ms delay before the alarm is triggered. When it is set to 0, there is no delay, and the alarm will be activated immediately when the alarm's condition is met.

Output to Digital Output: If using an AXM-IO2 module, users have the option to generate a pulse signal to the selected DO channel when an alarm is triggered.

Table 4-1 - Digital Output Alarm Translation

DO Code	DO Channel	IO Module
DO211	DO1	AXM-IO2-1
DO212	DO2	AXM-IO2-1
DO221	DO1	AXM-IO2-2
DO222	DO2	AXM-IO2-2

Output to Relay Output: If using an AXM-IO1 or AXM-IO3 module, users have the option to send a signal to the relay output when an alarm is triggered. Select one of the following options in the RO drop down menu:

Table 4-2 - Relay Output Alarm Translation

RO Code	RO Channel	IO Module
111	RO1	AXM-IO1-1
112	RO2	AXM-IO1-1
121	RO1	AXM-IO1-2
122	RO2	AXM-IO1-2
311	RO1	AXM-IO3-1
312	RO2	AXM-IO3-1
321	RO1	AXM-IO3-2
322	RO2	AXM-IO3-2

NOTE: If RO is under alarm mode, it can only work in the "latch" mode.

Table 4-3 - Alarming Parameter Code Table

Alarming Parameter Code	Alarming Parameter	Alarming Parameter Code	Alarming Parameter	Alarming Parameter Code	Alarming Parameter	Alarming Parameter Code	Alarming Parameter
0	Frequency	21	Total Reactive Power	42	Analog Input Channel 2 (AXM_IO3-1)	63	DI2 (AXM-IO3-1)
1	Phase A Voltage	22	Phase A Apparent Power	43	Analog Input Channel 1 (AXM-IO3-2)	64	DI3 (AXM-IO3-1)
2	Phase B Voltage	23	Phase B Apparent Power	44	Analog Input Channel 2 (AXM-IO3-2)	65	DI4 (AXM-IO3-1)
3	Phase C Voltage	24	Phase C Apparent Power	45	Active Power Demand	66	DI1 (AXM-IO1-2)
4	Average Phase Voltage	25	Total Apparent Power	46	Reactive Power Demand	67	DI2 (AXM-IO1-2)
5	Line Voltage AB	26	Phase A Power Factor	47	Apparent Power Demand	68	DI3 (AXM-IO1-2)
6	Line Voltage AC	27	Phase B Power Factor	48	Phase A Current Demand	69	DI4 (AXM-IO1-2)
7	Line Voltage BC	28	Phase C Power Factor	49	Phase B Current Demand	70	DI5 (AXM-IO1-2)
8	Average Line Voltage	29	Total Power Factor	50	Phase C Current Demand	71	DI6 (AXM-IO1-2)
9	Phase A Current	30	Voltage Unbalance Factor	51	Reverse Phase Sequence	72	DI1 (AXM-IO2-2)
10	Phase B Current	31	Current Unbalance Factor	52	DI1 (AXM-IO1-1)	73	DI2 (AXM-IO2-2)
11	Phase C Current	32	Load Characteristic	53	DI2 (AXM-IO1-1)	74	DI3 (AXM-IO2-2)
12	Average Current	33	Phase A (Vab) THD	54	DI3 (AXM-IO1-1)	75	DI4 (AXM-IO2-2)
13	Neutral Current	34	Phase B (Vac) THD	55	DI4 (AXM-IO1-1)	76	DI1 (AXM-IO3-2)
14	Phase A Power	35	Phase C (Vbc) THD	56	DI5 (AXM-IO1-1)	77	DI2 (AXM-IO3-2)
15	Phase B Power	36	Average Voltage THD	57	DI6 (AXM-IO1-1)	78	DI3 (AXM-IO3-2)

Distributed by MicroDAQ, LLC
(603) 746-5524
www.microdaq.com

Alarming Parameter Code	Alarming Parameter	Alarming Parameter Code	Alarming Parameter	Alarming Parameter Code	Alarming Parameter	Alarming Parameter Code	Alarming Parameter
16	Phase C Power	37	Phase A Current THD	58	DI1 (AXM-IO2-1)	79	DI4 (AXM-IO3-2)
17	Total System Power	38	Phase B Current THD	59	DI2 (AXM-IO2-1)		
18	Phase A Reactive Power	39	Phase C Current THD	60	DI3 (AXM-IO2-1)		
19	Phase B Reactive Power	40	Average Current THD	61	DI4 (AXM-IO2-1)		
20	Phase C Reactive Power	41	Analog Input Channel 1 (AXM-IO3-1)	62	DI1 (AXM-IO3-1)		

4.7.1 Alarm Log

Acuvim-L series meter has built-in alarm logging capabilities where sixteen entries in total can be recorded.

The record No. sequence of these entries does not indicate the order of the alarm events. The meter begins logging alarm status starting from the first record location to the last one. Alarm logs are recorded in a "cycle" fashion where the latest time stamp event will overwrite the oldest recorded time stamp event.

When over/under alarm limit parameters return to normal, its value and timestamp will be recorded allowing the over/under limit duration to be determined by subtracting the time difference.

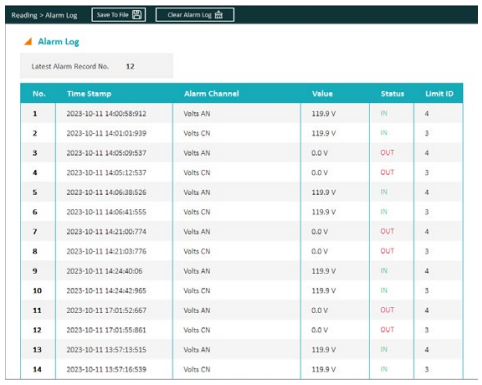

No.	Time Stamp	Alarm Channel	Value	Status	Limit ID
1	2023-10-11 14:00:58:912	Volts AN	119.9 V	IN	4
2	2023-10-11 14:01:01:939	Volts CN	119.9 V	IN	3
3	2023-10-11 14:05:09:537	Volts AN	0.0 V	OUT	4
4	2023-10-11 14:05:12:537	Volts CN	0.0 V	OUT	3
5	2023-10-11 14:06:38:526	Volts AN	119.9 V	IN	4
6	2023-10-11 14:06:41:555	Volts CN	119.9 V	IN	3
7	2023-10-11 14:21:00:774	Volts AN	0.0 V	OUT	4
8	2023-10-11 14:21:03:776	Volts CN	0.0 V	OUT	3
9	2023-10-11 14:24:40:06	Volts AN	119.9 V	IN	4
10	2023-10-11 14:24:42:965	Volts CN	119.9 V	IN	3
11	2023-10-11 17:01:52:667	Volts AN	0.0 V	OUT	4
12	2023-10-11 17:01:55:861	Volts CN	0.0 V	OUT	3
13	2023-10-11 13:57:13:515	Volts AN	119.9 V	IN	4
14	2023-10-11 13:57:16:539	Volts CN	119.9 V	IN	3

Figure 4-19 Alarming Records

No.: There are a total of 16 alarm numbers in the Alarm Log, and each number corresponds to an alarm event. For example, the newest alarm record number entry in Figure 4-19 is record No. 8.

Time Stamp: The Acuvim-L meter can log the timestamp to determine when the alarm event occurred. The timestamp format is YYYY-MM-DD hh:mm:ss:ms.

Alarm Channel: This column specifies which parameter triggered the alarm event.

Value: Displays the parameter value that triggers the alarm condition as well as the value that returns the alarm back to its normal condition.

Status: Indicates whether the alarm is triggered or not. When the status is ***OUT,*** the alarm has been triggered. When the alarm status is ***IN,*** the alarm returns to its normal condition.

Limit ID: Refers to the alarm (1-16) that was configured in the alarm settings.

Users can check if there is a new alarm record as well as the log number associated with the newest alarm record. The alarm event log

can also be reset from the software, the meter display (refer to Chapter 3 for screen sequence), or through Modbus communication (refer to Chapter 6).

The alarm logs can be saved from the Acuview 2 software as CSV file.

4.8 Meter Settings

The meter settings can be configured from the meter display (refer to Chapter 3 for screen sequencing), through the Modbus registers (refer to Chapter 6), and from the Acuview 2 software. The meter settings need to be configured correctly in order for the Acuvim-L meter to read data. After configuring any of the meter settings, users will need to click on the ***Update*** button located at the top of the settings page for the setting to take effect.

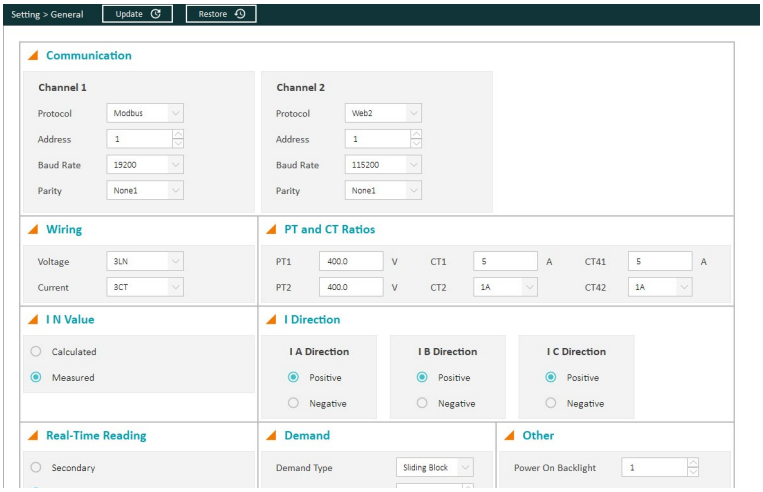

Figure 4-20 - Basic Meter Settings

4.8.1 Communication

- **Communication Channel 1** - Refers to the meter's RS485 communication port, and the settings are relative to Modbus RTU or DNP over serial communication.
  - **Protocol** - Can be set as **Modbus** or **BACnet**. Modbus is the default protocol.
  - **Address** - The slave ID, with the default value being 1.The allowable range is from 1 to 247.
  - **Baud Rate** - The communication speed measured in bits per second. The default value is 19200, and the range is from 2400 to 115200.
  - **Parity** - The communication parity. The default setting is None1, indicating no parity and 1 stop bit.
- **Communication Channel 2** - Refers to the secondary communication of the meter, typically involving a communications module such as AXM-WEB2.
  - **Protocol** - Can be set as **Other, PROFI,** or **WEB2.**
  - **Other** is the default protocol with a default baud rate of 38400. Its baud rate can be changed from 4800 to 115200. This protocol can be used with AXM-WEB2 without Fast Read.
  - **WEB2** protocol will fix the baud rate at 115200, which is the only allowable rate to access Fast Read mode. Users can still access the webpage with the Other protocol and a customized baud rate. However, if users want to access Fast Read, they must change the baud rate. Keep in mind that the meter and the AXM-Web2 module need a power cycle to match the baud rate again. Therefore, it is strongly recommended that users change communication channel 2 to Web2 before connecting to the AXM-Web2 module.

Distributed by MicroDAQ, LLC
(603) 746-5524
www.microdaq.com

- **PROFI** protocol is designed for PROFIBUS communications. Its baud rate will be set to 38400 by default, and it cannot be changed or modified.
- **Address** - The address is used as an identifier to access the meter via the communication protocol. For example, if using an Ethernet module and accessing the meter via Modbus TCP, this address would be used as the slave ID.
- **Baud Rate** - The baud rate is the communication speed required for communication between meter and communications module. By default, this is set for 38400 which is compatible with AXM-WEB2.
- **Parity** - The default setting is None1, which is required for communication with external communication modules.

Note: Resetting to the factory settings will reset both Communication Channel 1 and Communication Channel 2. The baud rate for Communication Channel 1 will be reset to 19200, and its protocol will be reset to Modbus. The baud rate for Communication Channel 2 will be reset to 38400, and its protocol will be reset to ***Other***. The parity for both channels is NONE1. The default address (slave ID) is 1.

4.8.2 Wiring, CT/PT Ratios

- **Wiring Mode**
  - **Voltage** - The Voltage wiring refers to the type of system that is being monitored by the Acuvim-L meter. By default, the wiring is set to 3LN (3 line and neutral) connection. For more information regarding wiring, refer to Chapter 2.
  - **Current** - The Current wiring setting refers to the number of current transformers being used. By default, the meter is set to 3CT. For more information regarding CT wiring, see Chapter 2.
- **CT/PT Ratio**
  - **PT1** - If using Potential Transformers with the meter at the voltage input, this setting refers to the Primary side rating of the transformer. The range is from 50.0-1000000.0. If PTs are not being used with the meter, this setting can be left as the default, which is 400.0.
  - **PT2** - If using Potential Transformers with the meter at the voltage input, this setting refers to the Secondary side rating of the transformer. the range is from 50.0-400.0. If PTs are not being used with the meter, this setting can be left as the default, which is 400.0.
  - **CT1** - The CT1 setting refers to the Primary side rating of the current transformers being used with the meter. For example, if the CTs being used have a ratio of 200:5A, the CT1 setting should be configured as 200. The allowable range for the CT1 setting is from 5 to 50000. The default CT1 value is 5 for 5A current input meters, 1 for 333mV/mA current inputs meters, and 1000 for RCT current input meters.
  - **CT2** - The CT2 setting refers to the secondary output of the current transformers. By default, the CT2 setting is already configured based on the current input type for the Acuvim-L meter. For example, the CT2 value will be configured to 5 for a 5A current input meter, 333 for a 333mV current input meter, and 120/60 (120mV per 60Hz) for an RCT current input meter.

NOTE: For 5A current input meters, the CT2 value can be changed from 5A to 1A to support 1A secondary output CTs.

- **Real-Time Reading** - The real time reading setting affects the Modbus registers readout from the Acuvim-L meter. By default, the meter is set to Secondary mode, which requires the application of a multiplier to the register readout to obtain the reading. When the meter is switched to Primary mode, no multiplier is required for register readout, providing direct and unadjusted values.

NOTE: The real time reading setting does not affect the reading on the meters display. It only affects the Modbus register reading of the meter when polling from the Modbus registers.

- **Neutral Current Value Setting (I N Value)** - The neutral current value can be configured as either Calculated or Measured.
- **Current Direction Setting** - The Acuvim-L supports a setting that allows users to change the current direction in the meter. This feature is beneficial if the CTs have been installed in the reverse direction or if the leads have been terminated with reverse polarity at the meter. By default, the current direction is configured as positive for I1, I2 and I3. Changing the current direction to negative

Distributed by MicroDAQ, LLC
(603) 746-5524
www.microdaq.com

essentially adjusts the phase angle of the current by 180 degrees, allowing for correct adjustment if there is an installation error.

4.8.3 Demand Settings

- **Demand Calculation Type** - There are four types of demand that the Acuvim-L meter supports: Fixed Block, Sliding Block, Thermal, and Rolling Block. See section 4.3 for a detailed description of each calculation method.
- **Average Interval Window** - The averaging time used in the demand calculation method. The default is 15 minutes, and the range is from 1 to 30 minutes.
- **Window Interval** - The window sub-interval time is used in the rolling block method, where the sub-interval must be a factor of the averaging interval window. The default is 1 minute, and the range is from 1 to 30 minutes.

4.8.4 Energy Reading & Power Factor Settings

- **Energy Type** - Users can configure the energy type as either fundamental or fundamental + harmonics.
- **Energy Reading** - The energy reading affects the meter calculation. If set to Primary, the meter will accumulate energy based on the primary usage. If configured as Secondary, the meter will use the secondary values for the energy accumulation, providing a resolution of 1 Wh.
- **VAR/PF Convention** - Users can select the convention as either IEC or IEEE.
- **VAR Calculation Method** - There are two ways to calculate reactive energy (power)

1. True Method - This method uses the Budeanu Concept to calculate the True reactive power. This method generally uses the harmonic components to do the calculation instead of using the power vector triangle method. The most common definition of reactive power is Budeanu's definition, given by following expression for single phase circuit:

$$Q_b = \sum_{k=1}^{+\infty} I_{k,RMS} \cdot V_{k,RMS} \cdot \sin(\theta_k - \psi_k)$$

Budeanu proposed that apparent power consists of two orthogonal components, active power and nonactive power, which are divided into reactive power and distortion power:

$$D_b = \sqrt{S^2 - P^2 - Q_b^2}$$

2. Generalized Method - The method uses Fryze's concept to calculate the Generalized reactive power. This method separates instantaneous current into two components, active and reactive currents. Active current is calculated as:

$$i_a(t) = \frac{P}{V_{RMS}^2} v(t)$$

And reactive current as:

$$i_r(t) = i(t) - i_a(t)$$

Active and reactive powers are as follows, where Ia and Ir represents RMS values of instantaneous active and reactive currents:

4.8.5 Load Percentage

The rated load can be represented in terms of either power or current.

Distributed by MicroDAQ, LLC
(603) 746-5524
www.microdaq.com

- If current is selected, the rated current that is used would be the CT1 setting value in the PT/CT ratio settings. For example, if CT1 is set for 1000A and the average current monitored by the meter is 500A, the load percentage would be 50% (500/1000).
- If power is selected, the rated primary power would be used in the load percentage calculation. The max primary power can be calculated as follows:

Without using PTs
Pmax = 3 x (480) x (CT1)

With using PTs
Pmax = 3 x (PT1) x (CT1).

The max primary power would be the power that is entered in the **Rated Watt Total** setting.

The load percentage is displayed on the front of the Acuvim-L meter display. The load percentage is calculated based on the following equation:

$$Load\ Percentage\ = \left(\frac{Active\ system\ power}{(5A\ or\ 1A) \times\ User\ setting}\right) \times 100\%$$

Whether the meter will have either a 5A or 1A current input. If users have Acuvim-L meters with Rogowski Coil (RCT), 333mV type Current Inputs, then 1A is used in this equation.

For example, if the max primary power of the system is 576000W (or 576kW), the system is currently using 211kW and the meters current input type is 5A, then the load percentage would be calculated as follows:

$$Load\ Percentage\ = \left(\frac{211kW}{5 \times 576kW}\right) \times 100\ =\ 7\%$$

The load percentage can only be viewed on the front LCD display of the Acuvim-L meter. Figure 4-21 shows where it is located on the display.

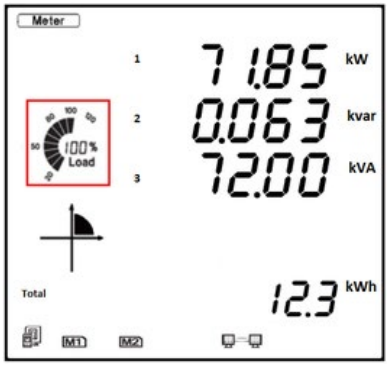

Figure 4-21 Load Percentage

4.9 Time & Date Configuration

The meter can have its time and date configured from the Acuview 2 software or by writing to the Modbus registers (refer to Chapter 6). Please note that this is not configurable from the meter display. From the Acuview 2 software in the ***System Status*** section under the ***Reading*** tab, users can configure the time and date for the meter.

The meter's time can be saved when the meter is powered off. However, if the meter is powered off for seven days or longer, it will reset to the default time.

Users have the option to configure the date and time manually or synchronize it with the PC's system clock. Simply select the desired option and click on the ***Set Time*** button for the setting to take effect.

NOTE: If users have a communication module, they will also need to configure the date and time from the module's web interface for the time to take effect.

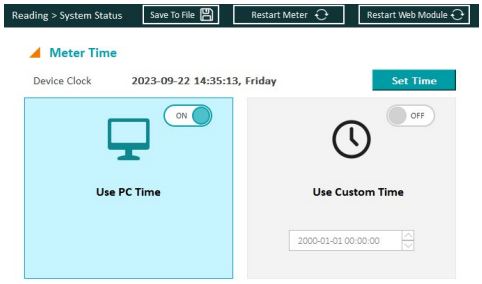

Figure 4-22 Meter Time Configuration

4.10 Data Logging

The Acuvim-L models support data logging stored onto the meter's built-in 8MB internal memory. The base model Acuvim-L does not include internal memory and does not support data logging capabilities. The meter can log data and store it on to the meter's internal memory, where users can read and pull the data from the memory. The data is logged with timestamps to allow users to monitor the exact time each record was logged. Data logging allows analysis using the meter's data to further research and billing purposes.

NOTE: If users have the base Acuvim-L model, they can log data onto the computer's memory. However the Acuview 2 software must be running at all times for this to occur.

4.10.1. Data Log Setting

The Acuvim-L meters have four data logs available where each log can be independently programmed with individual settings. This allows each data log to monitor different types of parameters, where the users can program up to 114 parameters per log for Data Log 1, 2, and 3, and up to 38 parameters per log for Data Log 4.

It is important to note that Data Log 4 is used specifically for trend log. It can capture parameters' maximum, minimum, and average values.

Data Logging Parameters - Users can select the data logging parameters on the software from the parameter box located on the left of the interface. Users can select different types of measurement options by selecting the parameter type from the drop-down menu. The following parameter types are available for data logging:

- **Real-Time Metering** - Includes real time parameters such as voltage, current, power, and so forth.
- **Demand** - Includes both power and current demand parameters.
- **Energy** - Includes all energy types such as import, export, net, total, reactive, etc.
- **THD -** Includes all THD parameters such as THF, Crest Factor, THFF, etc.
- **Voltage & Current Harmonics** - Includes all individual harmonic parameters (2nd to 63rd order harmonics for each voltage and current phase).
- **Sequence Components** - Includes positive, negative and zero sequence components.
- **Phase Angle** - Includes Voltage and Current phase angle parameters.
- **DI Counter** - If using an external I/O module, the user can log the DI counter value.
- **Analog Output/Input Raw & Scaled Values** - Users have the option to log the AO/AI values, both the raw values as well as the scaled values. More information on scaling for AO/AI can be found in Chapter 5.

Distributed by MicroDAQ, LLC
(603) 746-5524
www.microdaq.com

- **Dual Source** - Includes dual source energy parameters.
- **Independent Input Channel Parameters** - Includes parameters from Independent Wiring Reading.

Users can select the parameters they want to log, and then click on the ***Add*** button to add the parameters. Parameters can be deleted by selecting the parameter and clicking on the ***Remove*** button. Users can clear the entire data log by clicking on the ***Clear All*** button.

Memory Usage - As parameters are added to the data log, there is a ***Space Allocation*** section from the software that allows users to monitor the memory usage. Each data log, including Data Log 1, 2, and 3, can accommodate up to 228 bytes of data, while Data Log 4 can accommodate 76 bytes of data. Each parameter uses roughly 2 to 4 bytes of memory. The Max records will be dependent on the sector percentage that is configured for the data log. A higher sector percentage will result in more records being available to store in the data log.

Registers & Sectors - In this section, users can set the ***Sectors*** value to an appropriate value for Data Log 1, 2, and 3. The sector ranges from 0 to 100. Setting the value to 100 causes the data log to use the entire memory capacity of the meter. It is important to note that the combined total sector number for Data Log 1, Data Log 2, and Data Log 3 must not exceed 100.

For example:

- If you are only using Data Log 1, the sector can be set up to 100.
- If you are using Data Log 1 and Data Log 2, both sectors can be set to 50.
- If you are using Data Log 1, Data Log 2, and Data Log 3, the sectors can be set to 30, 30 and 40.

- The Sectors value for Data Log 4 is fixed at 50

Logging Interval - The logging interval determines how often the data is recorded in the data log. The logging interval can be configured within the range of 1 to 1440 minutes. If the interval is set to 0, the data log is disabled. If users wish to log data at faster rate, they will need to use a communication module (AXM-WEB2 or AXM-WEB-PUSH) with the Acuvim-L meter to log as frequently as every 1 second.

Logging Mode - There are three different types of logging modes that can be configured. Please note that the time will need to be configured correctly on the meter for the data to log successfully.

- **Start Logging Immediately** - This starts logging immediately and does not stop. When the memory is full, the meter starts to overwrite the data from the oldest data log entry (first-in first-out method).
- **Start Logging Time** - This mode has a specific start time for the data log to begin logging. Users will need to specify the start time by selecting the hour and minute. Once the data starts to log, it does not stop, and similar to the immediate logging mode, the data will start to overwrite the oldest data log entry when the memory is full.
- **Logging Scheduler** - The meter logs data within a specific time interval. Users will need to specify both the start and end time for the data log. The meter will continue to log data until it reaches the end time or until the memory is full, whichever comes first.

Once all configuration is complete, users must click on the ***Update*** button located at the top of the page. Please note that updating Data Log 1, 2, or 3 will result in the erasure of all three data logs. It is crucial for users to download and save all data logs before changing the configuration. Additionally, updating Data Log 4 does not affect Data Log 1, 2, and 3, and vice versa.

Distributed by MicroDAQ, LLC
(603) 746-5524
www.microdaq.com

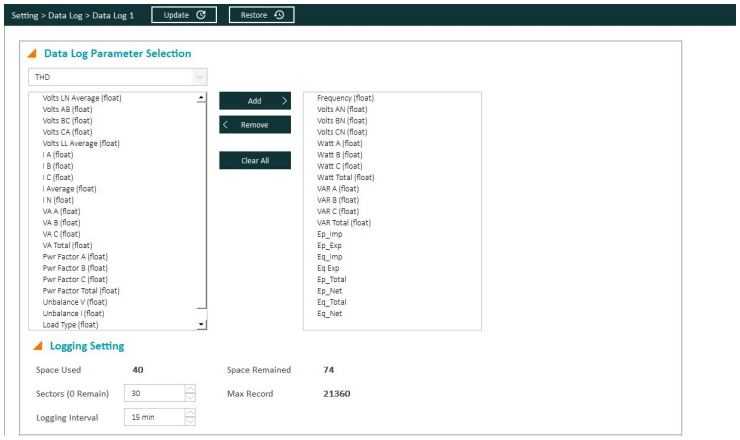

Figure 4-23(a) The Data Log 1 Setting

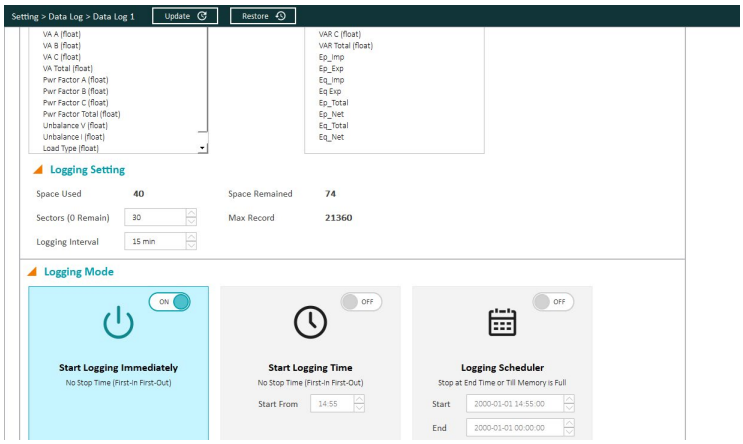

Figure 4-23(b) The Data Log 1 Setting

NOTE: If the memory of the historical data log is full, the meter will erase the first sector in which the memory size is 65536 bytes (64kb). The following sector (the second sector) will become the first sector and the data from the erased sector will not be recoverable. Therefore, the user should save the whole log before the memory is full to maintain all data.

4.10.2 Retrieving the Data Log

The data logs can be retrieved directly from the Acuview 2 software or by Modbus (refer to Chapter 6). In the Acuview 2 software, under the **Reading** tab, select **Data Log**. The top of the screen will show an overview of the three data logs which include the Max number of records for the data log, the number of used records, the record size, the window status, and the first/last recorded timestamp.

In the drop-down menu, users can select which data log to retrieve the data from. By default, Data Log 1 will appear. Use the drop-down menu to switch between Data Log 1, 2, 3, and 4.

In the second drop-down menu, users can select the number of records, or a specific range of records they wish to view. The following options are available:

- Read newest 50 records
- Read 1000 records (From Selected Record)
- Read 64000 records (From Selected Record)
- Read 1000 records (From Selected Time)

Distributed by MicroDAQ, LLC
(603) 746-5524
www.microdaq.com

- Read 64000 records (From Selected Time)

After selecting the viewing option, users can select a specific record number or input a specific time to begin reading the data log. It is important to note that this option is not valid when reading the newest 50 records, but it is applicable to all other reading options.

Once the data log settings are configured, click on ***Read Log*** located in the upper right corner of the page, and the data will begin to populate. The time taken for data population will vary depending on the number of records selected to read, so it may take several minutes. The data will be displayed in a tabular format, allowing users to scroll through the data. Figure 4-24 shows the data retrieval.

Users can click on the ***Save To File*** button to save the data log as a CSV file.

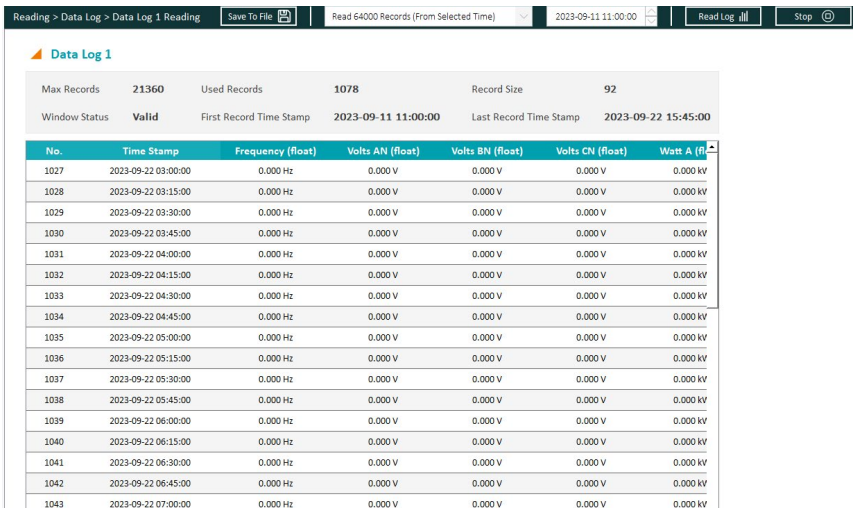

No.	Time Stamp	Frequency (float)	Volts AN (float)	Volts BN (float)	Volts CN (float)	Watt A (fl
1027	2023-09-22 03:00:00	0.000 Hz	0.000 V	0.000 V	0.000 V	0.000 kV
1028	2023-09-22 03:15:00	0.000 Hz	0.000 V	0.000 V	0.000 V	0.000 kV
1029	2023-09-22 03:30:00	0.000 Hz	0.000 V	0.000 V	0.000 V	0.000 kV
1030	2023-09-22 03:45:00	0.000 Hz	0.000 V	0.000 V	0.000 V	0.000 kV
1031	2023-09-22 04:00:00	0.000 Hz	0.000 V	0.000 V	0.000 V	0.000 kV
1032	2023-09-22 04:15:00	0.000 Hz	0.000 V	0.000 V	0.000 V	0.000 kV
1033	2023-09-22 04:30:00	0.000 Hz	0.000 V	0.000 V	0.000 V	0.000 kV
1034	2023-09-22 04:45:00	0.000 Hz	0.000 V	0.000 V	0.000 V	0.000 kV
1035	2023-09-22 05:00:00	0.000 Hz	0.000 V	0.000 V	0.000 V	0.000 kV
1036	2023-09-22 05:15:00	0.000 Hz	0.000 V	0.000 V	0.000 V	0.000 kV
1037	2023-09-22 05:30:00	0.000 Hz	0.000 V	0.000 V	0.000 V	0.000 kV
1038	2023-09-22 05:45:00	0.000 Hz	0.000 V	0.000 V	0.000 V	0.000 kV
1039	2023-09-22 06:00:00	0.000 Hz	0.000 V	0.000 V	0.000 V	0.000 kV
1040	2023-09-22 06:15:00	0.000 Hz	0.000 V	0.000 V	0.000 V	0.000 kV
1041	2023-09-22 06:30:00	0.000 Hz	0.000 V	0.000 V	0.000 V	0.000 kV
1042	2023-09-22 06:45:00	0.000 Hz	0.000 V	0.000 V	0.000 V	0.000 kV
1043	2023-09-22 07:00:00	0.000 Hz	0.000 V	0.000 V	0.000 V	0.000 kV

Figure 4-24 Data Log Retrieval Page

4.11 Time-of-Use (TOU)

Most utility companies bill customers according to their Time-of-Use rates. Customers are billed at certain rates based on the time of the day the energy usage occurs. The Acuvim-L meter supports a Time-of-Use function that allows users to assign up to four different tariffs to different time periods within the same day according to their billing requirements. The meter will calculate and accumulate energy to each of the different tariffs configured based on the meter's time/date and TOU settings.

The Time-of-Use (TOU) must be configured from the Acuview 2 software by selecting ***TOU*** under the ***Setting*** tab.

4.11.1 General TOU Setting

Users can enable the TOU function in the Acuvim-L meter by turning on the feature in the ***TOU*** page under the ***Setting*** tab.

The TOU general setting page includes the following:

- **Setting Status** - Display the presence of error in the TOU settings. "Valid" indicates that all settings are correct. If there are multiple errors in the TOU settings, it will be displayed as "N/A".
- **Billing & Tariff Setting** - Monthly Billing Mode and Tariff.
- **TOU Year Schedule**
- **TOU Schedule**
- **TOU Holiday Schedule**
- **TOU Weekend Schedule**

TOU Settings include the configurations for the following:

Season/Year Schedule Setting

This setting allows the division of a year into seasons, with each season mapped to a specific schedule. A maximum of 12 seasons can be configured, and each operates according to its designated TOU Schedule.

Schedule Setting

Each schedule divides a day (24 hours) into segments, mapping each segment to a tariff. This parameter determines the number of available TOU schedules for the TOU calendar setting, with a maximum limit of 14 schedules. Each schedule can be further divided into time segments, each assigned a tariff.

Segment Setting

Segments are part of a schedule, and each schedule can accommodate a maximum of 14 time segments. Each segment is assigned a specific tariff.

Tariff Setting

The meter supports up to 4 tariffs in the TOU function. Users can select the desired number of tariffs for TOU configurations.

Weekend Schedule Setting

Users can designate specific day(s) of the week as weekends and configure which schedule to apply during the weekends.

Holiday Setting

The setting allows programming a maximum of 30 holidays into the TOU calendar. Users can assign a schedule for each holiday.

To configure the TOU settings, users are advised to follow these steps:

1. Select the desired number of tariffs in the Tariff Setting.

2. Configure the schedule(s) in the Schedule Settings. Edit each schedule to define the segments included in the schedule.

3. Set the seasons in the Year Schedule Setting and assign each season with a previously configured schedule.

4. Specify the weekend days in the Weekend Schedule Setting and configure the holidays in the Holiday Settings.

After configuring the TOU settings, users should click on the Update button located at the top of the page to save the changes. Users also have the option to restore the TOU setting back to its default settings using the ***Reset To Default*** button.

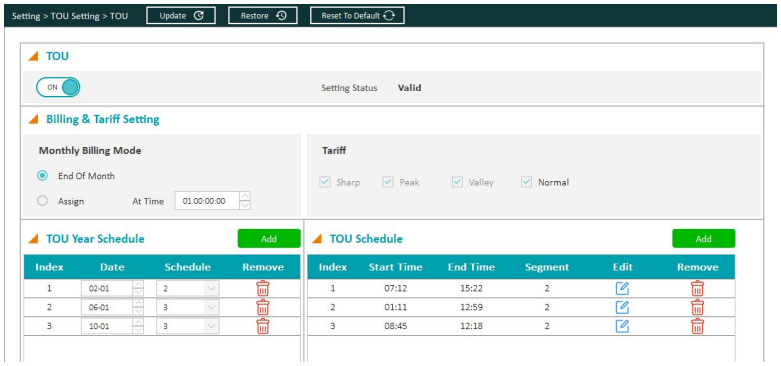

Figure 4-25(a) TOU Settings

Distributed by MicroDAQ, LLC
(603) 746-5524
www.microdaq.com
ACCUENERGY
www.accuenergy.com

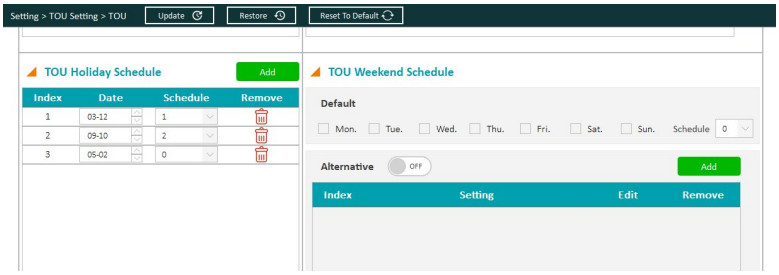

Figure 4-25(b) TOU Settings

4.11.2 Billing & Tariff Setting

Figure 4-26 TOU Billing & Tariff Setting

Monthly Billing Mode

Users can select the monthly billing that matches their billing requirements, and there are two available billing modes:

- **End Of Month:** Bill at end of every month.
- **Assign:** Bill at the desired time selected by the users. Input the specific time and date (DD HH:MM:SS) for every month.

Tariff Setting

The Acuvim-L series meter's TOU function accommodates up to four different tariffs. Users can set the tariffs by selecting the desired number of tariffs for TOU configurations. The following four options are available:

- 1 Tariff - Sharp
- 2 Tariffs - Sharp, Peak
- 3 Tariffs - Sharp, Peak, Valley
- 4 Tariffs - Sharp, Peak, Valley, Normal

4.11.3 TOU Year Schedule

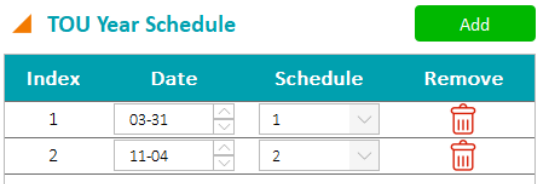

Figure 4-27 TOU Season Configuration

There can be a maximum of 12 seasons configured in the Acuvim-L for the TOU settings. Each season will operate based on the TOU Schedule it is configured with.

To add a new season, use the ***Add*** button. To remove a season from the table, click on the corresponding garbage bin icon under the ***Remove*** column.

Enter the start date of each season into the TOU Year Schedule table slot following the format MM-DD:

- MM represents the month (ranges from 1 to 12)
- DD represents the day (ranges from 1 to the maximum number of days in selected month)

For each season in the table, select the corresponding TOU schedule that should run during that season. The available TOU schedules can be added or configured in the TOU Schedule table, with a maximum of 14 schedules.

Organize the dates in sequential order according to the calendar year, with earlier dates appearing first and later dates appearing late. For example, if the user configures two seasons with start dates on March 31 and November 4 and assigns TOU schedules 1 and 2 respectively, the first TOU season table slot should have "03-31" for Date and "1" for Schedule, and the second slot should have "11-04" for Date and "2" for Schedule. This configuration results in the first season running from March 31st to November 4th, and the second season running from November 4th to the following year's March 31st.

NOTE: If the slot is filled incorrectly, the TOU function will be disabled

4.11.4 TOU Schedule

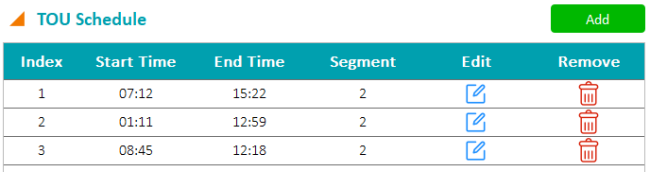

Index	Start Time	End Time	Segment	Edit	Remove
1	07:12	15:22	2		
2	01:11	12:59	2		
3	08:45	12:18	2		

Figure 4-28 TOU Schedule Configuration

The TOU Schedule table, shown in Figure 4-28, supports a maximum of 14 schedules. The TOU schedules in the table are available for the TOU calendar settings. Each schedule can be divided up into time segments, with each schedule accommodating up to 14 time segments. Furthermore, each segment is assigned a tariff.

To add a new schedule, use the ***Add*** button. To remove a schedule from the table, click on the corresponding garbage bin icon located under the Remove column. If users wish to edit a schedule, click on the corresponding edit icon under the Edit column, then the configuration window for that schedule will be opened.

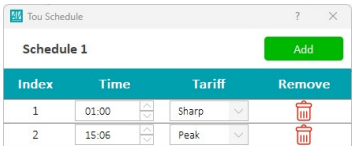

Index	Time	Tariff	Remove
1	01:00	Sharp	
2	15:06	Peak	

Figure 4-29 TOU Segment Configuration

The TOU Schedule configuration window can be seen in Figure 4-29. Each TOU schedule corresponds to a 24-hour cycle.

To add a new segment, use the Add button. To remove a segment from the table, click on the corresponding garbage bin icon located under the Remove column.

Similar to TOU Year Schedule format, enter the start time of each segment into the TOU schedule table slot following the format HH:MM:

- HH stands for hour (range is in 24-hour format, 0 to 24 hours)
- MM stands for minutes (range is from 00 to 59 minutes)

For each segment in the table, select the corresponding tariff that should run during that time segment. The available tariffs can be configured in the Tariff setting.

It is essential to ensure that the time segments are organized in chronological order. For example, if 3 segments are configured with

Distributed by MicroDAQ, LLC
(603) 746-5524
www.microdaq.com

timing parameters 01:00, 15:30, 22:45, the order should be one of the following: 01:00, 15:30, 22:45 or 15:30, 22:45, 01:00 or 22:45, 01:00, 15:30. Entering time information in a wrong sequence (for example, entering 15:30, 01:00, 22:45) is considered an invalid operation and will disable the TOU function.

In Figure 4-29, TOU Schedule 1 is configured as follows:

- From 1:00AM to 3:06PM, all energy consumed will be accumulated under the Sharp Tariff
- From 3:06PM to 4:45PM, all energy consumed will be accumulated under the Peak Tariff
- From 4:45PM to 10:00PM, all energy consumed will be accumulated under the Normal Tariff
- From 10:00PM to the following day's 1:00AM, all energy consumed will be accumulated under the Valley Tariff

4.11.5 TOU Weekend Schedule

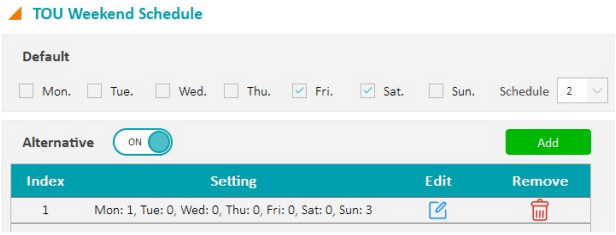

Figure 4-30 TOU Weekend Schedule Settings

The TOU Weekend Schedule settings allow users to assign specific days of the week as weekends. The Weekend Schedule includes Default Weekend Schedule and Alternative Weekend Schedule.

Default Weekend Schedule

Users can choose which days within the week should be considered as default weekend days. For these selected weekend days, users can choose the schedule they want to apply.

Alternative Weekend Schedule

The Alternative Weekend Schedule can be enabled to assign unique schedules for specific days of the week. Each season configured in TOU Year Schedule can have its distinct Alternative Weekend Schedule. For instance, the Alternative Weekend Schedule 1 is applicable to Season 1 (Year Schedule 1) only.

It is important to note that Alternative Weekend Schedules have higher priority than Default Weekend Schedule. If the Alternative Weekend Schedule is not enabled or if specific seasons do not have a unique schedule configured, the Default Weekend Schedule will be followed.

To add a new Alternative Weekend Schedule, use the Add button. To remove an Alternative Weekend Schedule from the table, click on the corresponding garbage bin icon located under the ***Remove*** column. If users wish to edit an Alternative Weekend Schedule, click on the corresponding edit icon under the Edit column, then the configuration window for that weekend schedule will be opened.

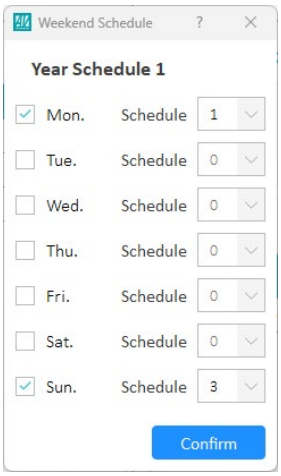

Figure 4-31 Alternative Weekend Schedule Setting

Within the Alternative Weekend Schedule configuration window, users can customize the days of the week for the corresponding season, allowing for unique schedule on those days.

As an example, Figure 4-31 provides a configuration for Alternative Weekend Schedule 1. In this scenario, the user selects Monday and Sunday and assigns TOU Schedule 1 to Monday and 3 to Sunday. The configuration indicates that during the first season, both Monday and Sunday of the week will follow the alternative weekend schedule. Monday will follow Schedule 1, and Sunday will follow Schedule 3.

4.11.6 Holiday Settings

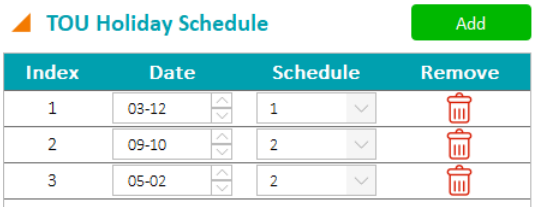

Figure 4-32 TOU Holiday Schedule Configuration

The Acuvim-L series meter supports holiday configuration within its TOU function, where a maximum of 30 holidays can be programmed into the TOU calendar.

To add a new holiday, click the Add button. To remove a holiday from the table, click on the corresponding garbage bin icon under the ***Remove*** column.

Enter the date of each holiday into the TOU Holiday Schedule table slot following the format MM-DD:

- MM represents the month (ranges from 1 to 12)
- DD represents the day (ranges from 1 to the maximum number of days in selected month)

For each season in the holiday, select the corresponding TOU schedule that should run during that day. The available TOU schedules can be added or configured in the TOU Schedule table, with a maximum of 14 schedules.

The dates of the holiday schedule do not need to be organized in sequential order. For instance, the first slot can be January 1, the second slot can be December 26, and the third slot can be December 25.

NOTE: The holiday schedule has the highest priority among all the schedules. The weekend schedule's priority is followed by the Holiday schedule. When the holiday schedule is not enabled, the weekend schedule has the highest priority, overriding the normal (weekday) schedule.

Distributed by MicroDAQ, LLC
(603) 746-5524
www.microdaq.com

4.11.7 Ten Years Holiday Settings

Acuvim Lv4 meters allow users to easily configure Time-of-Use (TOU) holidays for up to ten years. To set up a ten-year holiday schedule, users must first enable TOU. It is crucial to note that the ten-year holiday configuration takes precedence over TOU holiday settings. This means that if the ten-year holiday is enabled, manual editing of TOU holidays cannot be saved. The TOU setting page's holiday calendar will be replaced by the ten-year holiday calendar based on the year. Additionally, the first year's holiday calendar must not be empty.

During the ten-year holiday generation process, users have the option to either manually add holidays one by one or click **Generate Holidays** button to generate holidays using specific holiday codes.

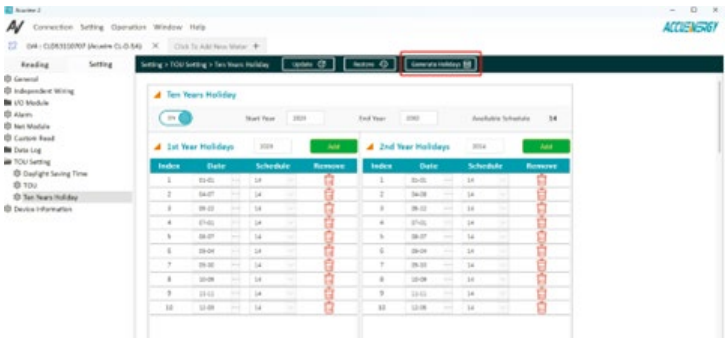

Before clicking the **'Generate Holidays'** button, users must ensure that they have **enabled** the 'Ten Years Holiday' option and configured the **Start Year** and **End Year** correctly.

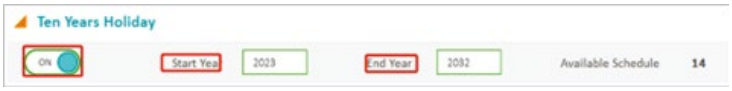

The gap between the start year and end year must be 10 years; otherwise, an error message will appear.

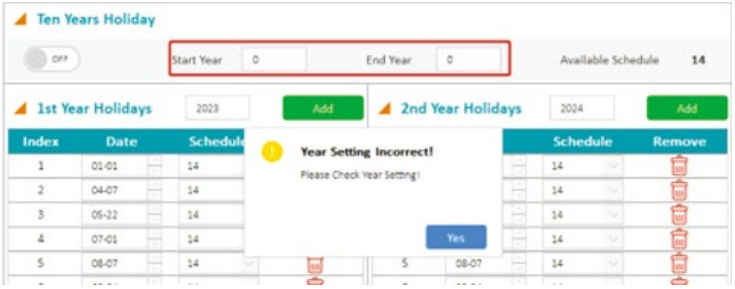

After the user clicks the 'Generate Holidays' button, a Ten-Year Holiday Auto Generation window will open.

Options include:

- **Schedule:** The schedule is configured on the TOU settings page. However, these schedule settings can be applied during the holiday generation process. Invalid schedule settings are not allowed.
- **Add:** Adds a new holiday to the calendar, with a maximum limit of 30 holidays.
- **Delete:** Removes the selected holiday.
- **Generate:** Applies the holiday settings to the Ten-Year Holiday Calendar.
- **Import:** Allows users to import a Ten-Year Holiday Auto Generation setting file. Users must click 'Generate' after importing to apply the changes.
- **Export:** Exports a .tyh configuration file for Ten-Year Holiday Auto Generation settings.

The 'Holiday codes' section provides users with seven holiday scheduling rules, each offering specific details:

Holiday Code	Details
0	The generated holiday applies only to the first year and occurs once.
1	The generated holiday will repeat itself for ten years.
2	The generated holiday repeats itself every year. If the holiday falls on Sunday, the tariff applies on the upcoming Monday.
3	The generated holiday repeats itself every year. If the holiday falls on Sunday, the tariff applies on the upcoming Monday. If the holiday falls on Saturday, the tariff applies on the previous Friday.
4	The generated holiday repeats itself every year with a rescheduled calendar. If the applied holiday for the current year is on Sunday, the date remains unchanged. If the same holiday for the target year is not on Sunday, the date automatically changes to the upcoming Sunday.
5	The generated holiday repeats itself every year with a rescheduled calendar. If the applied holiday for the current year is on Monday, the date remains unchanged. If the same holiday for the target year is not on Sunday, the date automatically changes to the upcoming Monday.
6	The generated holiday repeats itself every year with a rescheduled calendar. If the applied holiday for the current year is on Thursday, the date remains unchanged. If the same holiday for the target year is not on Sunday, the date automatically changes to the upcoming Thursday.

NOTE: Holiday Codes 2 to 6 will not take effect for the first year in the ten-year holiday. For example, if the holiday's Holiday Code is 2 and it falls on Sunday, the tariff will be applied on Sunday instead of the upcoming Monday on first year.

Extra example for Holiday Code:

	Holiday Code 4	Holiday Code 5	Holiday Code 6
Setting	12-08	12-06	12-03
2023	12-08 Friday	12-06 Wednesday	12-03 Sunday
2024	12-08 Sunday	12-09 Monday	12-05 Thursday
2025	12-14 Sunday	12-15 Monday	12-04 Thursday
2026	12-13 Sunday	12-14 Monday	12-03 Thursday
2027	12-12 Sunday	12-13 Monday	12-09 Thursday
2028	12-10 Sunday	12-11 Monday	12-07 Thursday
2029	12-9 Sunday	12-10 Monday	12-06 Thursday
2030	12-8 Sunday	12-09 Monday	12-05 Thursday
2031	12-14 Sunday	12-15 Monday	12-04 Thursday
2032	12-12 Sunday	12-13 Monday	12-09 Thursday

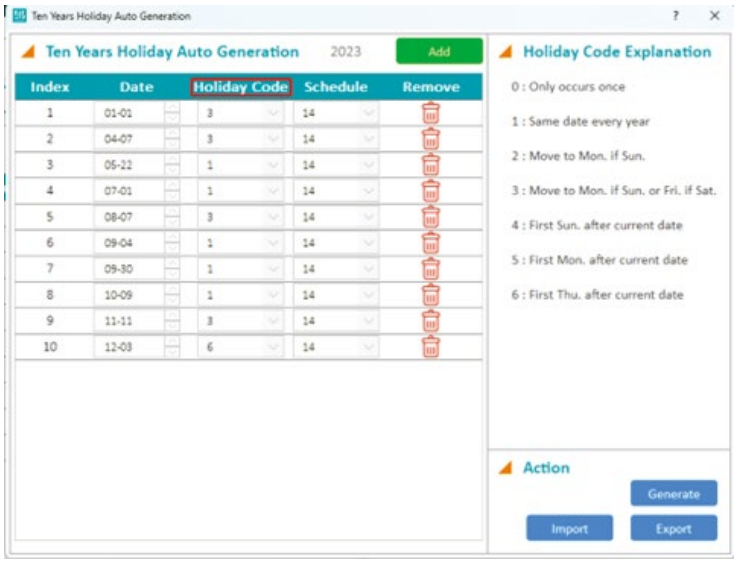

Distributed by MicroDAQ, LLC
(603) 746-5524
www.microdaq.com

After the user finishes the configuration by clicking the **'Generate'** button, it is necessary to click **'Update'** to save the settings. To ensure successful application of the settings, it is recommended for users to check the status by visiting the TOU setting page.

If an error code related to holidays occurs, it is recommended to click the **'Update'** button to save the current TOU settings. If the error code persists, please review the holiday schedule settings. For further assistance, please export the TOU's holiday settings and contact the Accuenergy technical support team.

4.11.8 DST Settings

The Acuvim-L series meter can automatically switch to and from the Daylight Saving Time, and this function can be enabled in the Daylight Saving Time page under the Setting tab from the Acuview 2 software. The DST can then be configured to follow one of two formats:

Fixed Date Option - If the fixed date option is chosen, DST is configured by specifying the exact start and end dates and times (in the format: MM-DD HH:MM) for DST, along with the desired adjust time.

Non-Fixed Date Option - If the non-fixed date option is chosen, DST is implemented based on a particular day of the week within a specific month. Users should choose a specific day of the week and week number, set the corresponding start and end times for DST (in the format: HH:MM), and specify the desired adjust time.

Setting the DST will cause the meter to automatically switch to daylight saving time. When the clock is set to daylight saving time, the meter will automatically adjust its internal clock to the correct time. When daylight saving time ends, the meter will automatically revert the clock back to standard time.

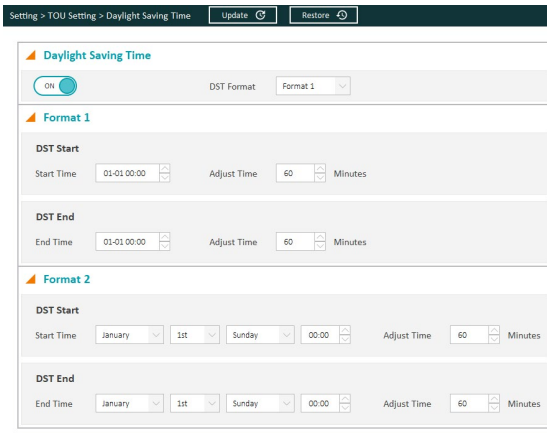

Figure 4-33 DST Settings

4.11.9 Reading the TOU data

Users can access the TOU readings by clicking on the ***TOU Reading*** option under the ***Reading*** tab. In this section, users will be able to view all energy consumption for each tariff as well as the consumption total during the TOU period. Acuvim-L series meters can also record maximum power and current demand under different tariffs, as well as the timestamp of the maximum value. In this section, the maximum demand value can be cleared for different tariffs.

TOU Reading includes ***Current Month TOU*** and ***Prior Month TOU.***

The Current Month TOU is divided into two sections, Accumulated and Incremental.

- **Current Month TOU (Accumulated)**: Refers to the TOU energy accumulated in the current month.
- **Current Month TOU (Incremental)**: Refers to the TOU energy recorded during the previous month, which is the difference between the TOU energy accumulated in this month and the TOU energy accumulated in the prior month.

•

Reading > TOU Reading > Current Month TOU Save To File

Accumulated

Parameter	Sharp	Peak	Valley	Normal	Total
Ep_Imp	0.724 kWh	0.557 kWh	0.238 kWh	0.000 kWh	1.520 kWh
Ep_Exp	0.000 kWh	0.000 kWh	0.000 kWh	0.000 kWh	0.000 kWh
Eq_Imp	0.000 kvarh	0.000 kvarh	0.000 kvarh	0.000 kvarh	0.000 kvarh
Eq_Exp	0.000 kvarh	0.000 kvarh	0.000 kvarh	0.000 kvarh	0.000 kvarh
Es	0.730 kVAh	0.561 kVAh	0.240 kVAh	0.000 kVAh	1.532 kVAh

Incremental

Parameter	Sharp	Peak	Valley	Normal	Total
Ep_Imp	0.303 kWh	0.494 kWh	0.000 kWh	0.000 kWh	0.797 kWh
Ep_Exp	0.000 kWh	0.000 kWh	0.000 kWh	0.000 kWh	0.000 kWh
Eq_Imp	0.000 kvarh	0.000 kvarh	0.000 kvarh	0.000 kvarh	0.000 kvarh
Eq_Exp	0.000 kvarh	0.000 kvarh	0.000 kvarh	0.000 kvarh	0.000 kvarh
Es	0.305 kVAh	0.497 kVAh	0.000 kVAh	0.000 kVAh	0.803 kVAh

Figure 4-34 Current Month TOU Readings (Accumulated and Incremental)

Reading > TOU Reading > Current Month TOU Save To File

Maximum Demand

Parameter	Sharp	Peak	Valley	Normal	Total
Watt (Imp)	1.798 kW 2000-03-01 00:00:00	1.798 kW 2000-03-01 06:00:00	0.000 kW 2000-03-01 00:00:00	0.000 kW 2000-03-01 00:00:00	1.798 kW 2000-03-01 00:00:00
Watt (Exp)	0.000 kW 2000-03-01 00:00:00	0.000 kW 2000-03-01 06:00:00	0.000 kW 2000-03-01 00:00:00	0.000 kW 2000-03-01 00:00:00	0.000 kW 2000-03-01 00:00:00
VAR (Imp)	0.000 kvar 2000-03-01 00:00:00	0.000 kvar 2000-03-01 00:00:00	0.000 kvar 2000-03-01 00:00:00	0.000 kvar 2000-03-01 00:00:00	0.000 kvar 2000-03-01 00:00:00
VAR (Exp)	0.000 kvar 2000-03-01 00:00:00	0.000 kvar 2000-03-01 00:00:00	0.000 kvar 2000-03-01 00:00:00	0.000 kvar 2000-03-01 00:00:00	0.000 kvar 2000-03-01 00:00:00
VA	1.798 kVA 2000-03-01 00:00:00	1.798 kVA 2000-03-01 06:00:00	0.000 kVA 2000-03-01 00:00:00	0.000 kVA 2000-03-01 00:00:00	1.798 kVA 2000-03-01 00:00:00
I A	4.998 A 2000-03-01 00:00:00	4.998 A 2000-03-01 06:00:00	0.000 A 2000-03-01 00:00:00	0.000 A 2000-03-01 00:00:00	4.998 A 2000-03-01 00:00:00
I B	4.998 A 2000-03-01 00:00:00	4.998 A 2000-03-01 06:00:00	0.000 A 2000-03-01 00:00:00	0.000 A 2000-03-01 00:00:00	4.998 A 2000-03-01 00:00:00
I C	4.997 A 2000-03-01 00:00:00	4.997 A 2000-03-01 06:00:00	0.000 A 2000-03-01 00:00:00	0.000 A 2000-03-01 00:00:00	4.997 A 2000-03-01 00:00:00

Clear Sharp Clear Peak Clear Valley Clear Normal Clear Total

Figure 4-35 Current Month TOU Readings (Maximum Demand)

The TOU function displays the prior month TOU readings from the Acuview 2 software. This allows users to compare the current month and previous month's readings for billing and analytical purposes. Similar to the current month, the prior month also allows users to view the Max Demand readings.

Reading > TOU Reading > Prior Month TOU Save To File

Accumulated

Parameter	Sharp	Peak	Valley	Normal	Total
Ep_Imp	0.421 kWh	0.063 kWh	0.238 kWh	0.000 kWh	0.723 kWh
Ep_Exp	0.000 kWh	0.000 kWh	0.000 kWh	0.000 kWh	0.000 kWh
Eq_Imp	0.000 kvarh	0.000 kvarh	0.000 kvarh	0.000 kvarh	0.000 kvarh
Eq_Exp	0.000 kvarh	0.000 kvarh	0.000 kvarh	0.000 kvarh	0.000 kvarh
Es	0.424 kVAh	0.063 kVAh	0.240 kVAh	0.000 kVAh	0.728 kVAh

Incremental

Parameter	Sharp	Peak	Valley	Normal	Total
Ep_Imp	0.288 kWh	0.000 kWh	0.238 kWh	0.000 kWh	0.526 kWh
Ep_Exp	0.000 kWh	0.000 kWh	0.000 kWh	0.000 kWh	0.000 kWh
Eq_Imp	0.000 kvarh	0.000 kvarh	0.000 kvarh	0.000 kvarh	0.000 kvarh
Eq_Exp	0.000 kvarh	0.000 kvarh	0.000 kvarh	0.000 kvarh	0.000 kvarh
Es	0.290 kVAh	0.000 kVAh	0.240 kVAh	0.000 kVAh	0.530 kVAh

Figure 4-36 Prior Month TOU Readings (Accumulated and Incremental)

Distributed by MicroDAQ, LLC
(603) 746-5524
www.microdaq.com

Reading > TOU Reading > Prior Month TOU Save To File

Maximum Demand

Parameter	Sharp	Peak	Valley	Normal	Total
Watt (Imp)	0.000 kW 2000-03-01 06:17:26	0.000 kW 2000-07-01 00:00:00	1.798 kW 2000-07-01 00:07:53	0.000 kW 2000-07-01 00:00:00	1.798 kW 2000-07-01 00:00:00
Watt (Exp)	0.000 kW 2000-03-01 06:17:26	0.000 kW 2000-07-01 00:00:00	0.000 kW 2000-07-01 00:07:53	0.000 kW 2000-07-01 00:00:00	0.000 kW 2000-07-01 00:00:00
VAR (Imp)	0.000 kvar 2000-03-01 06:17:26	0.000 kvar 2000-07-01 00:00:00	0.000 kvar 2000-07-01 00:00:00	0.000 kvar 2000-07-01 00:00:00	0.000 kvar 2000-07-01 00:00:00
VAR (Exp)	0.000 kvar 2000-03-01 06:17:26	0.000 kvar 2000-07-01 00:00:00	0.000 kvar 2000-07-01 00:00:00	0.000 kvar 2000-07-01 00:00:00	0.000 kvar 2000-07-01 00:00:00
VA	0.000 kVA 2000-03-01 06:17:26	0.000 kVA 2000-07-01 00:00:00	1.798 kVA 2000-07-01 00:07:53	0.000 kVA 2000-07-01 00:00:00	1.798 kVA 2000-07-01 00:00:00
I A	0.000 A 2000-03-01 06:17:26	0.000 A 2000-07-01 00:00:00	4.998 A 2000-07-01 00:07:53	0.000 A 2000-07-01 00:00:00	4.998 A 2000-07-01 00:00:00
I B	0.000 A 2000-03-01 06:17:26	0.000 A 2000-07-01 00:00:00	4.998 A 2000-07-01 00:07:53	0.000 A 2000-07-01 00:00:00	4.998 A 2000-07-01 00:01:53
I C	0.000 A 2000-03-01 06:17:26	0.000 A 2000-07-01 00:00:00	4.997 A 2000-07-01 00:07:53	0.000 A 2000-07-01 00:00:00	4.997 A 2000-07-01 00:00:00

Clear Sharp Clear Peak Clear Valley Clear Normal Clear Total

Figure 4-37 Prior Month TOU Readings (Maximum Demand)

When TOU is enabled and properly set up, energy will be accumulated on a month-to-month basis. The current energy usage will be stored under Current Month TOU (or Current Accumulation Month TOU) and is divided up into different tariffs. When next month (or counting period) starts, all Current Month TOU values will be moved to Prior Month TOU (or Prior Accumulation Month TOU).

The current month TOU will be reset depending on the monthly billing mode specified in the TOU settings, which can be either End of Month or Assigned Clock.

1. End of Month: This is the default method. All values from Current Month TOU will be copied over to Prior Month TOU at the very beginning of each month (the first day of each month at time 00:00:00). Current Accumulation Month TOU will continue to accumulate energy values, and at the beginning of each month (the first day of each month at time 00:00:00), all values from Current Month TOU will be copied over to Prior Month TOU. Then, the values in the Current Month TOU will be cleared and reset to 0.

2. Assigned Clock: Users can select when the values from Current Month TOU would be copied over to Prior Month TOU. Users can set the time in the following format: DD HH:MM:SS,where DD stands for day, HH stands for hour, MM stands for minute, SS stands for second. Similar to the End of Month method, once Current Month TOU is transferred to Prior Month TOU, Current Month TOU will be cleared and reset to 0.

4.12 Power Quality Event Logging Configuration

The Acuvim-EL meter supports monitoring and recording power quality events, such as voltage swells, voltage sags. This allows them to root out causes of mechanical equipment failure due to these power quality events

Voltage sags and swells are the reduction(sag) and enlargement(swell) of voltage over a short time. Voltage sags are the most common events which can affect power quality significantly and are often the most costly. Power quality events, such as voltage swells/sags, can significantly impact various equipment, including PLCs, relays, and controllers. The voltage sags can lead to overcompensation in the power supply of these devices, potentially causing damage to internal circuits and malfunctions. Although these events are often attributed to the utility, but they can also arise from the issues within the site, including grounding, bonding, coding issues, or from powering different equipment from the same supply.

4.12.1 Power Quality Event Configuration

The Acuvim-EL meter's power quality event settings can be configured from the Acuview 2 software in the Event page under the Setting tab. Alternatively, the power quality event settings can be configured via the Modbus registers, which are listed in Chapter 6 of the user manual.

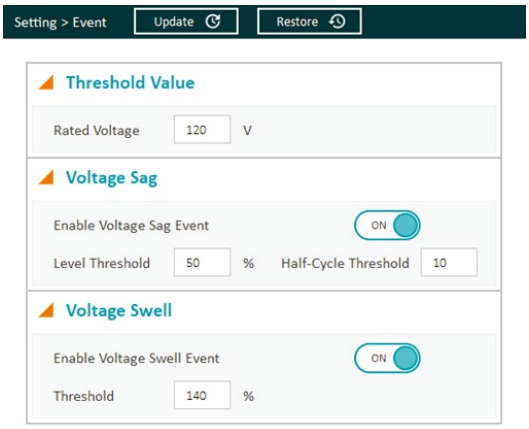

Figure 4-38 Power Quality Event Settings

Rated Voltage: The rated voltage of the system should be entered here. The range is from 50 to 400V for wye systems or from 50 to 690V for delta systems.

Voltage Swell: When any phase of the three-phase voltage is higher than the set value (voltage rated value x threshold %), there will be a voltage swell event. When a one phase voltage swell happens, the other phases will not respond to voltage swell event logging.

All phase voltages need to be restored back to normal before a new voltage swell event is recorded.

- **Enable Voltage Swell Event** - Enable the capture of voltage swell events.
- **Threshold** - Enter in the percentage of the voltage swell to be captured. The range is from 50 to 140%. For example, if the rated voltage is 277V, and the voltage swell threshold is set for 110%. The swell event would be captured when the voltage is 110% above 277V, which is roughly 304V.

Voltage Sag: When any phase of the three-phase voltage is lower than the set value (voltage rated value x threshold %), there will be a voltage sag event. When a one-phase voltage sag happens, the other phases will not respond to voltage sag event logging. All phase voltages need to be restored back to normal, before a new voltage sag event is recorded.

- **Enable Voltage Sag Event** - Enable the capture of voltage sag events.
- **Level Threshold** - Enter in the percentage of the voltage sag to be captured. The range is from 20 to 100%. For example, if the rated voltage is 277V, and the voltage sag threshold is set for 50%. The sag event would be captured when the voltage drops 50% below 277V, which is roughly 138V.
- **Half-cycle Threshold** - Enter in the half cycle threshold for the sag event, the range is from 4 to 200 half cycles.

NOTE: The rated voltage setting is used for both Voltage Swell and Voltage Sag events

4.12.2 Power Quality Event Logging

When a power quality event happens, such as voltage sag and swell, Acuvim-L meter will record the event timestamp and the triggering condition. It can save up to 50,000 events. The events can be viewed from Acuview 2 software in the **Event Log** located under the **Reading** tab.

The event log displays the newest event number and provides users with 3 viewing options, which can be selected from the drop-down menu:

Distributed by MicroDAQ, LLC
(603) 746-5524
www.microdaq.com

- Read Latest 10 Records
- Read Latest 50 Records
- Read 1000 Records (From Selected Records): Users can enter a desired starting record number, and the event log will display 1000 records starting from that record number. The default starting record number is 1.

Once the viewing option is selected, users can click on **Read Log** to view the records in the event log.

The event log displays the record number, the timestamp (YYYY-MM-DD hh:mm:ss:ms format) of when the event occurred, the reason for the event (sag or swell), the voltage rating, and the threshold as well as the half cycle configured.

The records can be saved in CSV format. Users can also clear the events log by clicking on **Clear Log** button.

Once the event log reaches 50,000 events, no more events will be logged even if the triggering condition happens. The user must clear the event log to continue logging power quality events. After clearing the log, new event will be logged once an event occurs.

NOTE: The event log does not lose data when the power is shut off.

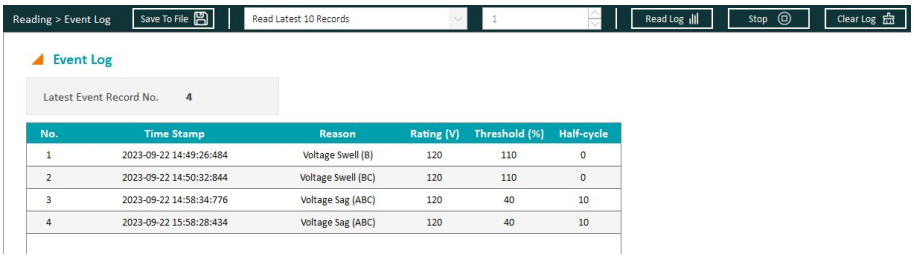

No.	Time Stamp	Reason	Rating (V)	Threshold (%)	Half-cycle
1	2023-09-22 14:49:26:484	Voltage Swell (B)	120	110	0
2	2023-09-22 14:50:32:844	Voltage Swell (BC)	120	110	0
3	2023-09-22 14:58:34:776	Voltage Sag (ABC)	120	40	10
4	2023-09-22 15:58:28:434	Voltage Sag (ABC)	120	40	10

Figure 4-39 Event Log Records

4.13 Dual Source Energy

The Acuvim-L series meters have bi-directional energy capability that allows users to control the direction (Grid/Generator) of the energy accumulation. The user can control the direction either by the Digital Input or through communication. There are two directions in which the energy can be changed to, "Grid" and "Generator".

Users can change the direction of the energy based on the Active Energy, Reactive Energy and Apparent Energy. Below is a table of that lists all the available parameters for this feature.

Table 4-4 Bi-Directional Energy Parameters

Parameter	Config Option
Active Energy	Ep
Phase A Active Energy	Ep_A
Phase B Active Energy	Ep_B
Phase C Active Energy	Ep_C
Reactive Energy	Eq
Phase A Reactive Energy	Eq_A
Phase B Reactive Energy	Eq_B
Phase C Reactive Energy	Eq_C
Apparent Energy	Es
Phase A Apparent Energy	Es_A

Phase B Apparent Energy	Es_B
Phase C Apparent Energy	Es_C

The bi-directional energy function can be enabled in the General Settings on the Acuview 2 software. Users can select the enabled option and configure the settings accordingly.

Switching Mode: Select the method for changing the direction of the energy. Users can either change the direction using the Digital Input (DI1-DI28), or they can use "Comm." control, which changes the direction via Modbus register write to the control register.

Metering Direction: Can be selected as either "Grid" or "Generator".

Energy 1/2/3: Select the energy parameter desired, refer to table 4-4 for parameter list.

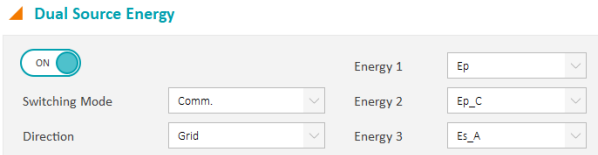

Figure 4-40 Dual Source Energy Settings

4.13.1 Controlling the Energy Direction

There are two methods to control the energy direction: Communication and the Digital Input. If the communication method is used, users need to write to the Modbus energy direction register, and the details of the register are provided in the table below.

Table 4-5 Dual Source Direction Register

Address (H)	Address (D)	Parameter	Range	Data Type	Access Property
1685H	5765	Bi-Directional Energy Direction	0: "Grid" 1: "Generator"	Word	R/W

When DI1 to DI28 are selected as control inputs, the direction will change when the DI status is ON (High), and it will change again when the status changes to OFF (Low). The following table lists the DI mapping from 1 to 28 with the corresponding I/O modules for the Acuvim-L meter.

Table 4-6 DI Mapping for Dual Source Control Input

I/O Module	DI Channel Mapping
AXM-IO11	DI1-DI6
AXM-IO21	DI7-DI10
AXM-IO31	DI11-DI14
AXM-IO12	DI15-DI20
AXM-IO22	DI21-DI24
AXM-IO32	DI25-DI28

4.13.2 Bi-Directional Energy Switching Record

Whenever there is a change in direction for the energy, the Acuvim-L meter will keep the historical changes in the Dual Source Log. The record supports 20 event records and will be overwritten from the earliest entry once the records reach the max amount.

The Dual Source Energy readings and log can be saved as CSV file using ***Save To File*** button located on the top of the page. ***Clear Dual Source Energy*** allows the users to reset the dual source energy readings, and the Dual Source Log can be cleared by clicking on ***Clear Log*** button.

Distributed by MicroDAQ, LLC
(603) 746-5524
www.microdaq.com
ACCUENERGY
www.accuenergy.com

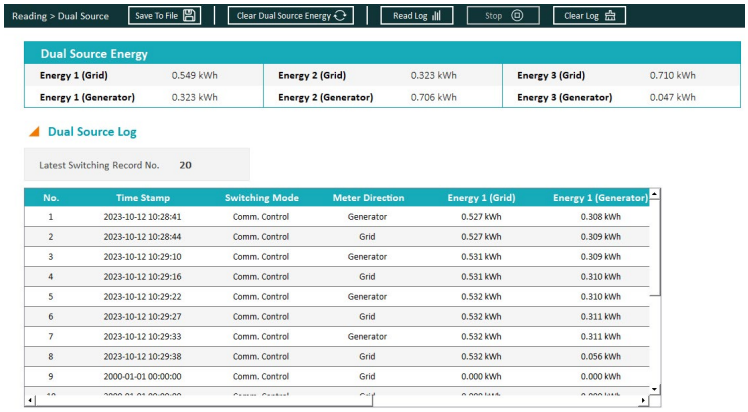

Figure 4-41 - Dual Source Energy Record

4.14 Seal Function

The Acuvim-L supports a sealing function where the Acuvim-L meter can be electronically sealed and prevent any tampering of the meter settings or readings. The seal function can only be configured by writing to the Modbus registers and not from the meters display or Acuview 2 software. The register address for the seal function can be found later in the manual in Chapter 6.

When the meter is sealed, some meter functions and certain parameters will be blocked. These parameters will still be accessible from the meter display or by Modbus. However, they cannot be changed or modified.

NOTE: By default, the Acuvim-L meter is not sealed.

When the meter is in sealed status, the parameters listed in the tables below will be blocked.

Table 4-7 System Parameters Settings blocked in Sealed Status

Parameters	Meter Display Keys	Modbus Communication
Voltage Input Wiring Mode	√	√
Current Input Wiring Mode	√	√
PT1(High 16 bit)	√	√
PT1(Low 16 bit)	√	√
PT2	√	√
CT1	√	√
CT2	√	√
kWh pulse constant	√	√
kvarh pulse constant	√	√
Demand slide window time	√	√
Demand calculating mode	√	√
Clear demand memory	√	√
Current I1 direction	√	√
Current I2 direction	√	√
Current I3 direction	√	√
VAR/PF convention	√	√
Energy clear	√	√
Energy Calculation Mode	√	√
Reactive Power Calculation Method	√	√
Energy Display Mode	√	√
Basic Parameter Mode	√	√
Sealed Nonstandard Parameters Selection	---	√

NOTE: "√" means these addresses will be blocked from the meter's display keys and Modbus communication, and "-" means this function is unavailable.

Table 4-8 Energy Parameters Blocked in Sealed Status:

Parameters	Meter Display Keys	Modbus Communication
Energy IMP	---	√
Energy EXP	---	√
Reactive energy IMP	---	√
Reactive energy EXP	---	√
Energy TOTAL	---	√
Energy NET	---	√
Reactive energy TOTAL	---	√
Reactive energy NET	---	√
Apparent energy	---	√
Phase A Energy IMP	---	√
Phase A Energy EXP	---	√
Phase B Energy IMP	---	√
Phase B Energy EXP	---	√
Phase C Energy IMP	---	√
Phase C Energy EXP	---	√
Phase A Reactive energy IMP	---	√
Phase A Reactive energy EXP	---	√
Phase B Reactive energy IMP	---	√
Phase B Reactive energy EXP	---	√
Phase C Reactive energy IMP	---	√
Phase C Reactive energy EXP	---	√
Phase A Apparent energy	---	√
Phase B Apparent energy	---	√
Phase C Apparent energy	---	√

Table 4-9 Digital Output Parameters blocked in Sealed Status

Parameters	Meter Display Keys	Modbus Communication
Working mode of DO1 and DO2	√	√
DO pulse width	√	√
DO1 output	√	√
DO2 output	√	√
Working mode of DO3 and DO4	√	√
DO pulse width	√	√
DO3 output	√	√
DO4 output	√	√

4.14.1 Sealed Nonstandard Parameters

The following parameters are not sealed when the meter is in Sealed Status, but they can be manually configured to be sealed. These non-standard parameters can be sealed from either the Acuview 2 software or by writing to the Modbus registers. From the Acuview 2 software, this can be configured from the ***General*** page under the ***Setting*** tab.

Distributed by MicroDAQ, LLC
(603) 746-5524
www.microdaq.com

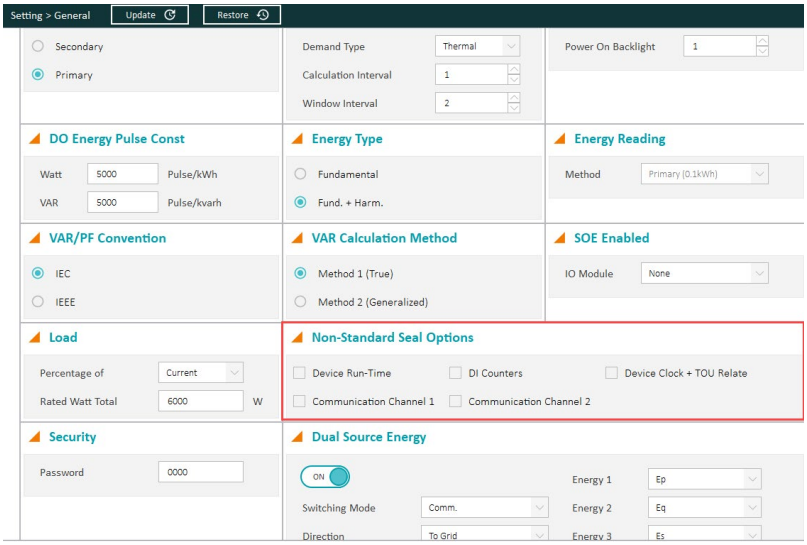

Figure 4-42 Sealed Nonstandard Parameter Configuration

There are five categories of non-standard parameters that can be sealed manually:

- Device Run-Time
- DI Counters
- Device Clock + TOU Relate
- Communication Channel 1
- Communication Channel 2

The following tables provide an explanation of which functions will be blocked if any of the non-standard parameters are selected to be sealed.

Table 4-10 Run Time Clear in Sealed Status

Parameters	Meter Display Keys	Modbus Communication
Run time clear	√	√

Table 4-12 DI Counter Functions Blocked in Sealed Status

Parameters	Meter Display Keys	Modbus Communication
Pulse counter clear	√	√
DI1-6 type	√	√
DI pulse constant	√	√
DI7-10 type	√	√
DI pulse constant	√	√
DI11-14 type	√	√
DI pulse constant	√	√
DI15-20 type	√	√
DI pulse constant	√	√
DI21-24 type	√	√
DI pulse constant	√	√
DI25-28 type	√	√
DI pulse constant	√	√

Table 4-13 TOU Functions blocked in Sealed Status

Parameters	Meter Display Keys	Modbus Communication
TOU		
Ten years of download setting enabled	---	√
Fee of sharp demand clear	---	√
Fee of peak demand clear	---	√
Fee of valley demand clear	---	√
Fee of normal demand clear	---	√
Total fee of demand clear	---	√
Current and last month TOU energy		
Current and last month TOU energy	---	√
DST setting		
DST setting	---	√
Season setting		
Basis parameter of TOU	---	√
Season setting	---	√
Ten years of holiday setting		
Ten years of holiday setting	---	√

Table 4-14 Communication Channel 1 Sealed Parameters

Parameters	Meter Display Keys	Modbus Communication
Run time clear	√	√
Parity Setting 1	√	√
Communication Address 1	√	√

Table 4-15 Communication Channel 2 Sealed Parameters

Parameters	Meter Display Keys	Modbus Communication
Baud rate 2	√	√
Parity setting 2	√	√
Communication address 2	√	√
Ethernet Module		
DHCP setting	√	√
IP address 1st byte (high)	√	√
IP address 2nd byte (low)	√	√
IP address 3rd byte (high)	√	√
IP address 4th byte (low)	√	√
Submask 1st byte (high)	√	√
Submask 2nd byte (low)	√	√
Submask 3rd byte (high)	√	√
Submask 4th byte (low)	√	√
Gateway 1st byte (high)	√	√
Gateway 2nd byte (low)	√	√
Gateway 3rd byte (high)	√	√
Gateway 4th byte (low)	√	√
DNS1 1st byte (high)	√	√
DNS1 2nd byte (low)	√	√
DNS1 3rd byte (high)	√	√
DNS1 4th byte (low)	√	√
DNS2 1st byte (high)	√	√
DNS2 2nd byte (low)	√	√
DNS2 3rd byte (high)	√	√
DNS2 4th byte (low)	√	√
Modbus TCP/IP port	√	√
HTTP port	√	√
BACnet Module		
BACnet module enable	√	√

Distributed by MicroDAQ, LLC
(603) 746-5524
www.microdaq.com

Parameters	Meter Display Keys	Modbus Communication
DHCP setting	√	√
IP address 1st byte (high)	√	√
IP address 2nd byte (low)	√	√
IP address 3rd byte (high)	√	√
IP address 4th byte (low)	√	√
Submask 1st byte (high)	√	√
Submask 2nd byte (low)	√	√
Submask 3rd byte (high)	√	√
Submask 4th byte (low)	√	√
Gateway 1st byte (high)	√	√
Gateway 2nd byte (low)	√	√
Gateway 3rd byte (high)	√	√
Gateway 4th byte (low)	√	√
DNS1 1st byte (high)	√	√
DNS1 2nd byte (low)	√	√
DNS1 3rd byte (high)	√	√
DNS1 4th byte (low)	√	√
DNS2 1st byte (high)	√	√
DNS2 2nd byte (low)	√	√
DNS2 3rd byte (high)	√	√
DNS2 4th byte (low)	√	√
MAC address	√	√
BACnet baud rate	√	√
Max info frames	√	√
BACnet Port	√	√
PROFIBUS Module		
PROFIBUS address	√	√

4.15 Phase Selection

The Phase Selection function is designed to help users correct their input installation mistakes without altering the physical Current wiring. It is important to note that this feature will only work if the correct voltage input is present. Users can configure this feature using Acuview 2 software, WEB2, or the HMI setting pages S55-58.

Please be aware of the following important notices:

- It is technically possible to use this feature in conjunction with the independent channel function. However, it is not recommended to do so.
- This feature cannot be used in conjunction with the independent channel function.
- Any changes made to the phase selection settings will require a power cycle to ensure that the new configuration takes effect.
- Performing a factory reset will reset the phase selection mapping, so users should keep this in mind when considering the reset operation.

For instance, if a user mistakenly swaps current phase A and current phase C during installation, they can configure the phase selection setting accordingly. Please refer to the following picture for an example of the meter configuration:

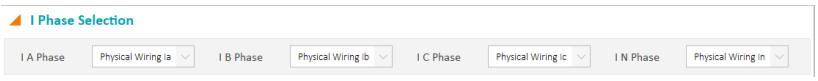

Figure 4-43 Phase Selection Configuration Panel

After the configuration, the Physical wiring on IC is remap to Channel IA, and Physical wiring on IA is remap to Channel IC. After configuring the phase swapping in the meter, it is necessary to perform a power cycle for the feature to work properly.

4.16 Independent Channel

4.16.1 Independent Channel Configuration

In order for users to enable the Independent Channel feature, there are several prerequisites that the meters need to be met. These prerequisites include:

1. Bootloader version is 6.07 or greater.
2. Phase Selection feature is disabled. (recommend)
3. The configuration of Phase N Current Type (I N value) is set to Measured.
4. The configuration of Modbus Real-Time Reading is set to Primary.
5. Connect to Acuview 2 software, AXM-WEB2 or AXM-WEB-PUSH module.

Important Notice

- When the Independent channel is enabled, the unbalance current reading and the unbalance voltage reading are not available; they will always be 0. Users need to reset the maximum/minimum values and energy every time they enable or disable the independent channel.
- If the input channel is set to None, the corresponding power readings will be empty.
- Waveform, fast read mode, TOU, and alarm functions are not fully supported when the independent channel is enabled. Users can still access those features; however, the results and settings may not be accurate.
- If the Data Log uses parameters from the Independent Channel, it is important to change the Data Log parameters to non-Independent Channel parameters. Otherwise, the Data Log will record empty input.

Enable Independent Channel

After meeting the prerequisite, users can enable Independent Channel by selecting ***ON*** for *Independent Wiring Mode* in the ***Independent Wiring*** page under the ***Setting*** tab and click on Update button located at the top of the window.

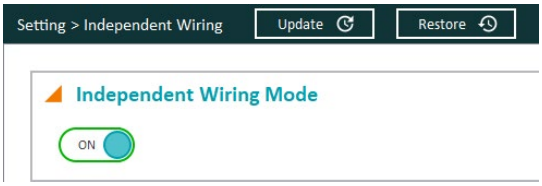

Figure 4-44 Enable Independent Channel

Changes on other functions when Independent Channel is enabled:

- **Dual Source Energy:** When independent channel is enabled, the Phase IN is not supported in dual source energy. However, the dual source energy for phase A, B, C can still be accessed.
- **Datalog:** Data log parameters for independent channels are supported when user enable the independent channel.
- **Independent channel reading:** The independent wiring reading page for Acuview 2 software is hidden unless the user enables the independent wiring feature in the setting page.
- **Alarm:** Independent channel parameters are not fully supported on alarm function. Users can still access the old alarm parameters.

CT configuration

When independent channel is enabled, CT's ratio can be configured individually.

Distributed by MicroDAQ, LLC
(603) 746-5524
www.microdaq.com

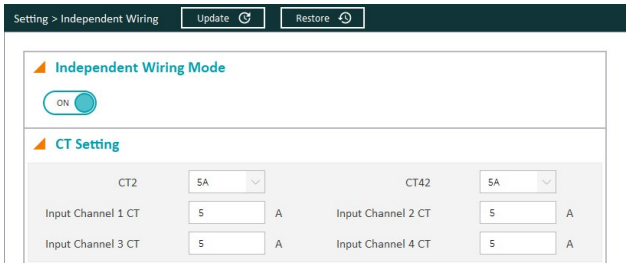

Figure 4-45 Independent Channel CT configuration

For MV or RCT meters, users have the flexibility to connect the meter with two different configurations.

- Option 1: Users can connect the meter with three current transformers (CT) on Phase A, B, and C, and one Rogowski current transformer (RCT) on Phase N.
- Option 2: Users can connect the meter with three Rogowski current transformers (RCT) on Phase A, B, and C, and one current transformer (CT) on Phase N.

These options provide users with choices according to their specific requirements and the availability of CTs and RCTs.

Voltage Channel ID

In the independent channel mode, users can configure Voltage Channel ID by selecting the corresponding Voltage from the drop-down menu. This setting allows users to access more detailed readings specifically related to the input channel associated with the selected voltage.

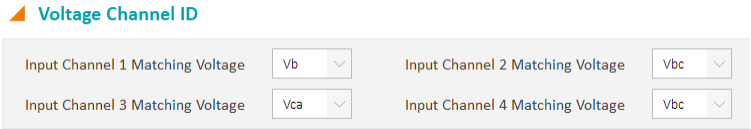

Figure 4-46 Independent Channel Voltage Channel ID Configuration

Please note that the configuration of Input Channel 1 to 4 can be customized without changing the physical wiring. The corresponding wiring diagram can be found in Figure 4-47 below for reference.

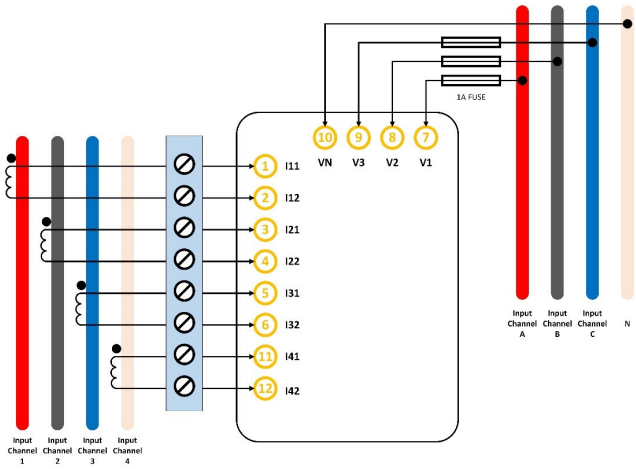

Figure 4-47 Independent Channel Wiring Configuration

Customized Summation

In the independent channel mode, users can configure summation by selecting individual phases. This setting allows the users to calculate the average current reading across the chosen channels as well as obtain the total power readings for those selected channels.

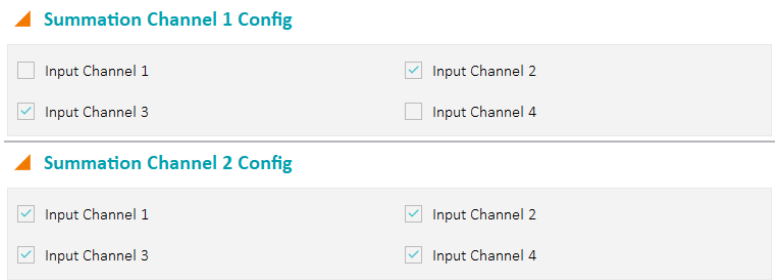

Figure 4-48 Independent Channel Summation Channel Configuration

4.16.2 Independent Channel Reading

Once Independent Channel is enabled, users can access the Independent Channel readings in the ***Independent Wiring Reading*** pages under the ***Reading*** tab.

The Independent Channel readings include the following:

- **Independent Wiring Mode Setting:** Displays all the Independent Channel configurations.
- **System Reading:** Includes voltage and frequency measurements for each phase.
- **Real-Time Reading:** Includes current and power measurements for each input channel.
- **Demand Reading:** Includes current and power demand measurements for each input channel.
- **Energy Reading:** Includes energy measurements for each input channel.
- **Max/Min:** Records maximum and minimum values of each independent channel parameter, along with their corresponding timestamps.

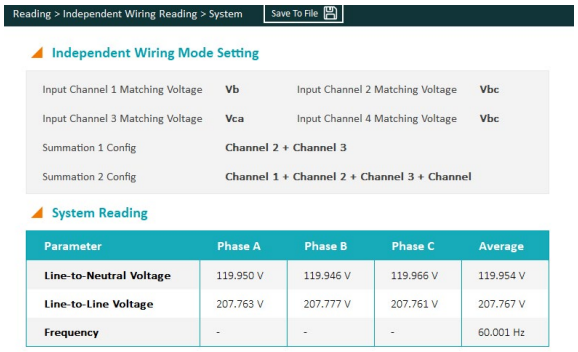

Figure 4-49 Independent Channel System Reading

Distributed by MicroDAQ, LLC
(603) 746-5524
www.microdaq.com

Reading > Independent Wiring Reading > Real-Time Save To File

Independent Wiring Mode Setting

Input Channel 1 Matching Voltage	Vb	Input Channel 2 Matching Voltage	Vbc
Input Channel 3 Matching Voltage	Vca	Input Channel 4 Matching Voltage	Vbc
Summation 1 Config	Channel 2 + Channel 3		
Summation 2 Config	Channel 1 + Channel 2 + Channel 3 + Channel		

Real-Time Reading

Parameter	Input Channel 1	Input Channel 2	Input Channel 3	Input Channel 4	Summation 1	Summation 2
Current	4.999 A	4.999 A	4.999 A	4.999 A	4.999 A	4.999 A
Active Power	-0.300 kW	0.900 kW	0.900 kW	-0.900 kW	1.799 kW	0.600 kW
Reactive Power	-0.519 kvar	0.519 kvar	0.519 kvar	0.519 kvar	1.039 kvar	1.039 kvar
Apparent Power	0.600 kVA	1.039 kVA	1.039 kVA	1.039 kVA	2.078 kVA	3.716 kVA
Power Factor	-0.500	0.866	0.866	-0.866	0.866	0.161
Load Type	L	L	L	L	L	L

Figure 4-50 Independent Channel Real-Time Reading

Reading > Independent Wiring Reading > Demand Save To File

Independent Wiring Mode Setting

Input Channel 1 Matching Voltage	Vb	Input Channel 2 Matching Voltage	Vbc
Input Channel 3 Matching Voltage	Vca	Input Channel 4 Matching Voltage	Vbc
Summation 1 Config	Channel 2 + Channel 3		
Summation 2 Config	Channel 1 + Channel 2 + Channel 3 + Channel		

Demand Reading Clear Demand

Parameter	Input Channel 1	Input Channel 2	Input Channel 3	Input Channel 4	Summation 1	Summation 2
Current Demand	4.999 A	5.000 A	4.999 A	4.999 A	-	-
Active Power Demand	0.000 kW	0.000 kW	0.000 kW	0.000 kW	1.799 kW	0.000 kW
Reactive Power Demand	0.000 kvar	0.000 kvar	0.000 kvar	0.000 kvar	1.039 kvar	0.000 kvar
Apparent Power Demand	0.000 kVA	0.000 kVA	0.000 kVA	0.000 kVA	2.077 kVA	0.000 kVA

Figure 4-51 Independent Channel Demand Reading

Reading > Independent Wiring Reading > Energy Save To File

Independent Wiring Mode Setting

Input Channel 1 Matching Voltage	Vb	Input Channel 2 Matching Voltage	Vbc
Input Channel 3 Matching Voltage	Vca	Input Channel 4 Matching Voltage	Vbc
Summation 1 Config	Channel 2 + Channel 3		
Summation 2 Config	Channel 1 + Channel 2 + Channel 3 + Channel		

Energy Reading Clear Energy

Parameter	Input Channel 1	Input Channel 2	Input Channel 3	Input Channel 4	Summation 1	Summation 2
Import Active Energy	0.000 kWh	1.463 kWh	1.463 kWh	0.000 kWh	2.926 kWh	2.927 kWh
Export Active Energy	0.487 kWh	0.000 kWh	0.000 kWh	1.446 kWh	0.000 kWh	1.934 kWh
Total Active Energy	-	-	-	-	2.926 kWh	4.862 kWh
Net Active Energy	-	-	-	-	2.926 kWh	0.993 kWh
Import Reactive Energy	0.000 kvarh	0.844 kvarh	0.844 kvarh	0.836 kvarh	1.688 kvarh	2.525 kvarh
Export Reactive Energy	0.844 kvarh	0.000 kvarh	0.000 kvarh	0.000 kvarh	0.000 kvarh	0.844 kvarh
Total Reactive Energy	-	-	-	-	1.688 kvarh	3.369 kvarh
Net Reactive Energy	-	-	-	-	1.688 kvarh	1.681 kvarh
Total Apparent Energy	-	-	-	-	3.379 kVAh	6.028 kVAh

Figure 4-52 Independent Channel Energy Reading

Reading > Independent Wiring Reading > Max/Min Save To File Reset Max/Min

Independent Wiring Mode Setting

Input Channel 1 Matching Voltage	Vb	Input Channel 2 Matching Voltage	Vbc
Input Channel 3 Matching Voltage	Vca	Input Channel 4 Matching Voltage	Vbc
Summation 1 Config	Channel 2 + Channel 3		
Summation 2 Config	Channel 1 + Channel 2 + Channel 3 + Channel		

Max / Min

Channel	Maximum	Time Stamp	Minimum	Time Stamp
Volts AN	300.799 V	2023-09-21 12:44:58	0.000 V	2023-09-18 15:00:13
Volts BN	300.186 V	2023-09-21 12:43:57	0.000 V	2023-09-18 15:00:13
Volts CN	300.132 V	2023-09-21 12:44:30	0.000 V	2023-09-18 15:00:13
Volts AB	525.587 V	2023-09-21 12:44:11	0.000 V	2023-09-18 15:00:13
Volts BC	535.991 V	2023-09-21 12:43:48	0.000 V	2023-09-18 15:00:13
Volts CA	519.488 V	2023-09-21 12:44:11	0.000 V	2023-09-18 15:00:13
Frequency	61.445 Hz	2000-01-01 00:56:04	0.000 Hz	2023-09-18 15:00:13
Input Channel 1 Current	27.602 A	2023-09-21 15:20:00	0.000 A	2023-09-18 15:00:13
Input Channel 2 Current	27.601 A	2023-09-21 15:20:00	0.000 A	2023-09-18 15:00:13
Input Channel 3 Current	27.601 A	2023-09-21 15:20:00	0.000 A	2023-09-18 15:00:13

Figure 4-53 Independent Channel Max/Min

Chapter 5: Extended Modules

5.1 I/O Modules

The standard Acuvim-L meter base does not have any built-in ports to handle input/output (I/O) signals. However, with the addition of the extended modules, multiple I/O options can be added. These functions include digital input/output status, pulse counter, relay output, analog output, and analog input. These I/O functions can be useful for a variety of metering application, such as counting/outputting pulse signals to/from water/gas meters, outputting 4 to 20mA analog signals to a PLC controller, or measuring the analog signal from a temperature sensor.

The Acuvim-L series meter supports three types of I/O modules: AXM-IO1, AXM-IO2 and AXM-IO3. A maximum of three external modules can be attached to the Acuvim-L meter, and this includes communication modules. When both communication module and I/O modules are installed on the meter simultaneously, the communication module is required to be installed on to the meter first, and then the I/O modules shall be installed after that. The meter can have a maximum of two I/O modules of the same type attached to the meter. If two I/O modules of the same type are connected to the meter, they must have a unique logic number. For example, if two AXM-IO2 modules are used simultaneously, then an AXM-IO2-1 and an AXM-IO2-2 are required. In this case, the logic number is the last digit for the two modules - 1 and 2 respectively.

NOTE: When using a communication module with I/O modules, the communication module must first be installed for the meter to operate correctly.

5.1.1 Appearance and Dimensions

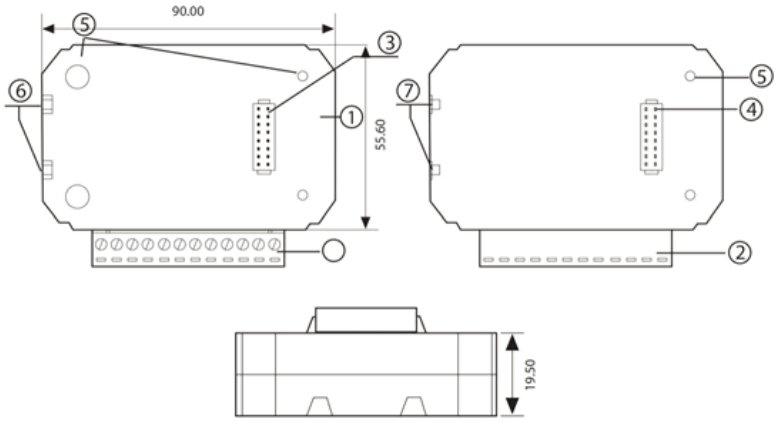

Figure 5-1 I/O Module Dimensions

Table 5-1 I/O Module Description Table

Number	Description
1	Enclosure
2	Wiring Terminals
3	Linking Pins
4	Linking Socket
5	Installation Screw
6	Counterpart of Clip
7	Installation Clip

Distributed by MicroDAQ, LLC
(603) 746-5524
www.microdaq.com

5.1.2 I/O Functionality

The **AXM-IO1** module is composed of:

- **6 Digital Inputs (DI)**
  - Each digital input can be used in pulse counter or digital status mode. In digital status mode, the DI will be used to detect remote signals and the meter will log the time/date of the detection and store it in the SOE (sequence of events) log of the Acuvim-L when enabled. In pulse counter mode, the DI will be used to count digital pulses.
  - Terminals ***DI1*** to ***DIC*** are the Digital Input terminals, where DIC is the common terminal for DI1 to DI6 circuits.
- **2 Relay Outputs (RO)**
  - The relay outputs can be used in two different modes, control mode or alarm mode, where both relay channels operate in the same mode. In control mode, users can configure the relay to work in either latch mode (ON/OFF) or momentary mode (ON/OFF for a certain time interval). When it operates in alarm mode, the relay will turn ON/OFF based on the status of the alarm configured in the Acuvim-L meter.
  - Terminals ***RO1*** to ***ROC*** are the Relay Output terminals, where ROC is the common terminal for RO1 and RO2 circuits.
- **24Vdc Power Supply**
  - Used as an auxiliary power supply for the digital input pulse circuits.
  - The voltage of the DI auxiliary power supply is 24V(1W).
  - Terminals ***V+*** and ***V-*** are the terminals for the 24Vdc power supply.

Figure 5-2 AXM-IO1 Module

The **AXM-IO2** module is composed of:

- **4 Digital Inputs (DI)**
  - Each digital input can be used in pulse counter or digital status mode. In digital status mode, the DI will be used to detect remote signals and the meter will log the time/date of the detection and store it in the SOE (sequence of events) log of the Acuvim-L when enabled. In pulse counter mode, the DI will be used to count digital pulses
  - Terminals ***DI1*** to ***DIC*** are the Digital Input terminals, where DIC is the common terminal for DI1 to DI4 circuits.
- **2 Analog Outputs (AO)**
  - Depending on the model, the AXM-IO2 can output an analog voltage or analog current based on certain parameters measured by the Acuvim-L meter.
    - When it outputs analog voltage, the range of voltage is from 0 to 5V or from 1 to 5V.
    - When it outputs analog current, the range of current is from 0 to 20mA or from 4 to 20mA.
  - Terminals ***AO1+*** to ***AO2-*** are the Analog Output terminals.

NOTE: The AXM-IO2 module can only output one type of analog signal.

- **2 Digital Outputs (DO)**

- The digital output can be used in either alarm mode or energy pulse output mode, and both DO channels will operate in the same mode. In energy pulse mode, the DO will send digital pulses based on various types of energy (consumed/generated or real/reactive) reading measured by the Acuvim-L meter. In alarm mode, the DO will output a digital pulse when an alarm is triggered.
- Terminals ***DO1*** to ***DOC*** are the Digital Output terminals, where DOC is the common terminals for DO1 and DO2.

Figure 5-3 AXM-IO2 Module

The **AXM-IO3** module is composed of:

- **4 Digital Inputs (DI)**
  - Each digital input can be used in pulse counter or digital status mode. In digital status mode, the DI will be used to detect remote signals and the meter will log the time/date of the detection and store it in the SOE (sequence of events) log of the Acuvim-L when enabled. In pulse counter mode, the DI will be used to count digital pulses.
  - Terminals ***DI1*** to ***DIC*** are the Digital Input terminals, where DIC is the common terminal for DI1 to DI4 circuits.
- **2 Relay Outputs (RO)**
  - The relay outputs can be used in two different modes, control mode or alarm mode, where both relay channels operate in the same mode. In control mode, users can configure the relay to work in either latch mode (ON/OFF) or momentary mode (ON/OFF for a certain time interval). When it operates in alarm mode, the relay will turn ON/OFF based on the status of the alarm configured in the Acuvim-L meter.
  - Terminals ***RO1*** to ***ROC*** are the Relay Output terminals, where ROC is the common terminal for RO1 and RO2 circuits.
- **2 Analog Inputs (AI)**
  - Can detect input analog voltage or analog current.
    - When it detects input analog voltage, the range of voltage is from 0 to 5V or from 1 to 5V.
    - When it detects input analog current, the range of current is from 0 to 20mA or from 4 to 20mA.
  - Terminals ***AI1+*** to ***AI2-*** are the Analog Input terminals.

NOTE: The AXM-IO3 can only read input from one type of analog signal.

Figure 5-4 AXM-IO3 Module

Table 5-2 I/O Module Functionality Table

Functions	AXM-IO1	AXM-IO2	AXM-IO3
Detection of remote signals	•	•	•
SOE Recording	•	•	•

Distributed by MicroDAQ, LLC
(603) 746-5524
www.microdaq.com

Functions	AXM-IO1	AXM-IO2	AXM-IO3
Pulse Counting	•	•	•
Relay Control	•		•
Relay Control by Alarm	•		•
Digital Output by Alarm		•	
Digital Pulse Output		•	
Analog Output		•	
Analog Input			•
24Vdc Power Supply	•		

5.1.3 Installation Method

Environment

Please verify that the installation environment meets the following requirements:

Temperature:

Operation: -25°C to 70°C, -13°F to 158°F

Storage: -40°C to 85°C, -40°F to 176°F

Humidity:

5% to 95% non-condensing

Location:

The Acuvim-L meter and I/O modules should be installed in a dry and dust-free environment, and they should be kept away from heat, radiation, and high levels of electrical noise or interference.

Installation Method:

Remove the ***Ext. Port*** cover from the back of the meter and any I/O module so that the linking pins are visible.

Figure 5-5 External Port Cover

NOTE: Use a small, flat head screwdriver to remove the external port cover from the back of the meter.

1. Insert the counterpart clips of the module into the Acuvim-L meter and then press the module down lightly to establish the linking.
2. Tighten the installation screws.
3. Install other modules following the steps above.

NOTE: Install each module carefully to avoid damage. Under no circumstances shall any installation be done with the meter powered on. Failure to do may cause damage to the meter.

NOTE: The maximum number of modules that can be attached to the meter is three. Ensure a communication module is installed on the meter prior to installing any I/O modules.

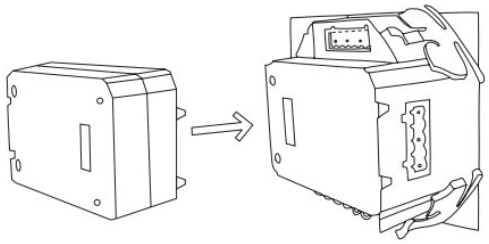

Figure 5-6 Installation of I/O module to Acuvim-L Meter

5.1.4 I/O Module Wiring

Digital Input

Wiring of Digital Input Circuit

There are six DI channels in the AXM-IO1 and four DI channels in the AXM-IO2 and AXM-IO3 modules. The Digital Input circuits within each of the modules are the same for both pulse counter and digital status modes. The digital input circuitry can be described in Figure 5-7 below. From the wiring schematic, when the switch K is open, the output OUT is in the high state. When the switch K is closed, the output OUT is in the low state.

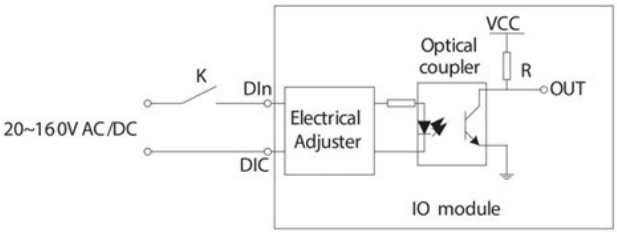

Figure 5-7 Digital Input Wiring Schematic

Digital Input ratings:

- **External Power Supply Rating:** 20-160Vac/Vdc
- **Maximum loop current:** 2mA
- **Start Voltage:** 15V
- **Stop Voltage:** 5V
- **Max Pulse Frequency:** 100Hz, 50% Duty Cycle (5ms ON and 5ms OFF)

Typical Digital Input Wiring

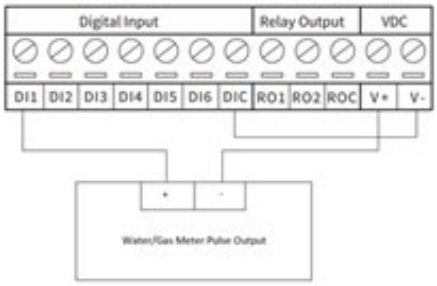

Figure 5-8 Digital Input pulse Counter Wiring using 24Vdc on AXM-IO1 Module

Distributed by MicroDAQ, LLC
(603) 746-5524
www.microdaq.com

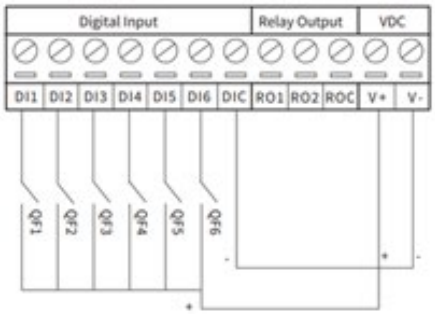

Figure 5-9 Multiple channel Digital Input Wiring Using 24Vdc on AXM-IO1 Module

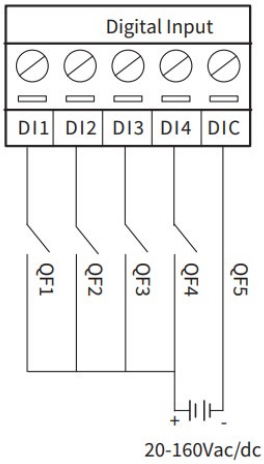

Figure 5-10 Digital Input Wiring Using AXM-IO2 and AXM-IO3 Modules

NOTE: The wire gauge to use with the DI should be chosen between AWG22 and 16.

Relay Output

There are two Relay Output channels in the AXM-IO1 and AXM-IO3 modules. The RO circuits can work in either control mode or alarm mode. The following diagram shows the schematic diagram of the relay output circuit, which is the same regardless of the operating mode.

The relay type is a mechanical form A contact with 3A/250Vac or 3A/30Vdc. When using the relay output, it is recommended that an intermediate relay is used to control the output device.

Relay Output ratings:

- **Switching Voltage (Max):** 250Vac, 30Vdc
- **Load Current:** 5A (R), 2A (L)
- **Set Time:** 10ms (Max)
- **Contact Resistance:** 30mΩ (Max)
- **Isolation Voltage:** 2500Vac
- **Mechanical Life:** 1.5e7

Typical Relay Output Wiring

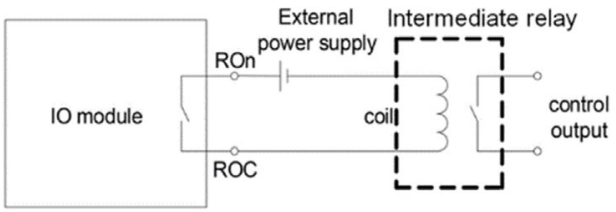

Figure 5-11 Relay Output Diagram

NOTE: The wire gauge to be used with the relay output should be chosen between AWG22 and 16.

Digital Output

There are two Digital Output channels on the AXM-IO2 module. The DO circuit can operate in either alarm mode or in energy pulse output mode.

The DO circuit is of Photo-MOS form. The simplified circuit is shown in Fig 5-12.

Digital Output ratings:

- **Voltage Range:** 0-250Vac/dc
- **Load Current:** 100mA (Max)
- **Output Frequency:** 25Hz, 50% Duty Ratio (20ms ON, 20ms OFF)
- **Isolation Voltage:** 2500Vac

Wiring of Digital Output Circuit

When the internal signal J is in the low state, the output OUT is also in a low state, resulting in no pulse output. When J is in a high state, the output OUT is in the high state, resulting in a pulse output.

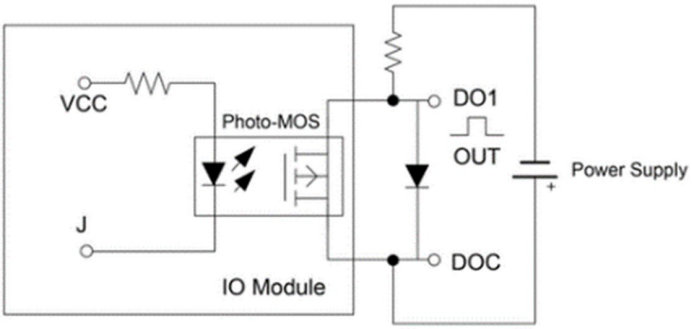

Figure 5-12 Digital Output Circuit

NOTE: The Digital Output is a dry contact and requires a voltage supply to generate the pulse signal.

Distributed by MicroDAQ, LLC
(603) 746-5524
www.microdaq.com

The circuit for the alarm mode with a buzzer is shown in Figure 5-13.

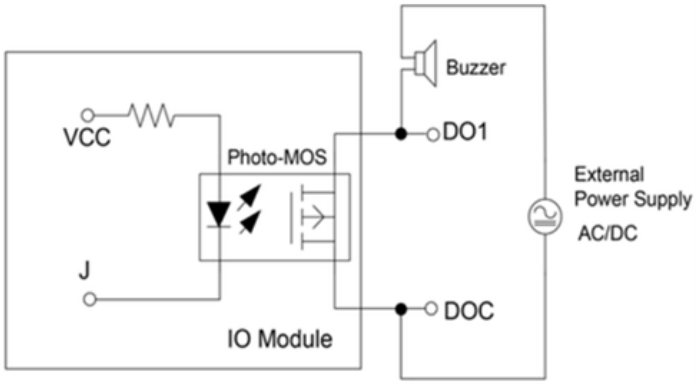

Figure 5-13 Digital Output as Alarm Mode

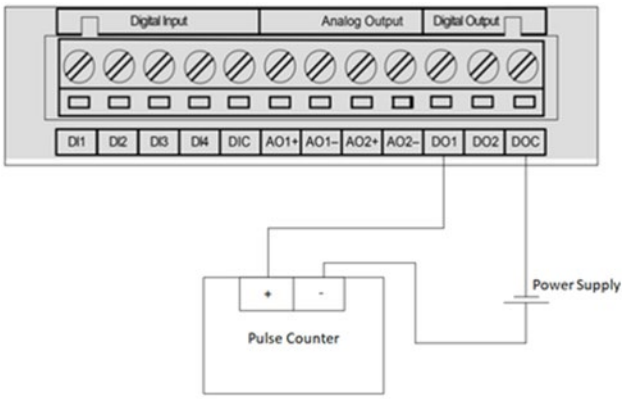

Figure 5-14 Digital Output to a Pulse Counter

NOTE: The power supply can be 0-250Vac/dc.

NOTE: The wire gauge to use for the DO should be chosen between AWG22 and 16.

Analog Output

There are two Analog Output channels on the AXM-IO2 module. The AO circuit can convert metering parameters into an AO signal as either a voltage or current signal. An AXM-IO2 module supports either voltage or current. The AO circuit within this module can provide either a 0-20mA or 4-20mA current output if the module supports current, or a 0-5V and 1-5V voltage output if the module supports voltage.

Wiring of Analog Output Circuit:

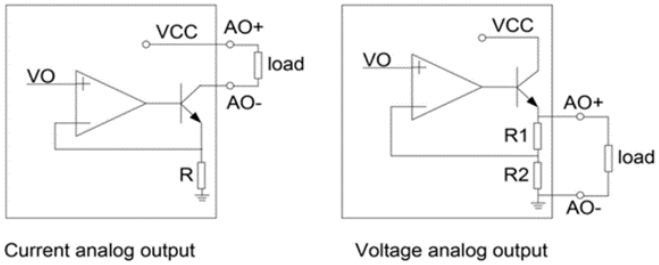

Figure 5-15 Analog Output circuit for voltage and current on AXM-IO2 module

Analog Output Ratings:

- **For the current output (0-20mA/4-20mA):** The max load resistance is 500Ohms.
- **For the voltage output (0-5V/1-5V):** The max load current is 20mA.
- **Accuracy:** 0.5%
- **Temperature Drift:** 50ppm/°C Typical
- **Isolation Voltage:** 500Vdc
- **Open Circuit Voltage:** 15V

Analog Input

Wiring of Analog Input Circuit:

There are two Analog Input channels on the AXM-IO3 modules. An AXM-IO3 module supports either voltage or current. The AI circuit within the module can provide either a 0-20mA or 4-20mA current input if the module supports current, or a 0-5V and 1-5V voltage input if the module supports voltage.

The simplified circuit is as shown in Figure 5-16.

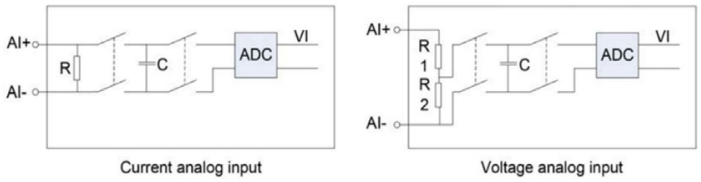

Figure 5-16 Analog Input Circuit for Voltage and Current on the AXM-IO3 Module

5.1.5 Detection of Remote Signals

By default, the Digital Input on all I/O modules are configured in ***State*** mode, where the meter provides a digital signal status (ON/OFF). When the DI circuit detects a sufficient voltage input, it will show a ***1*** on the screen and ***ON*** in the Acuview 2 software. Otherwise, it will show a ***0*** on the screen and ***OFF*** in the software.

Viewing the Digital status from the Meter's Display:

- Press ***H*** and ***V/A*** at the same time. The screen will go blank, and ***Meter*** will be flashing.
- Press the ***P*** or ***E*** key to move the flashing cursor over to ***Digital I/O*** and press ***V/A*** to enter.
- Next, users will see the I/O selection screen, select the appropriate I/O module and press ***V/A***.
- With the cursor on ***DI***, press ***V/A*** to view the Digital Input Status readings.

NOTE: Refer to Chapter 3 section 3.7.4 on how to configure the DI from the meter's display.

Distributed by MicroDAQ, LLC
(603) 746-5524
www.microdaq.com

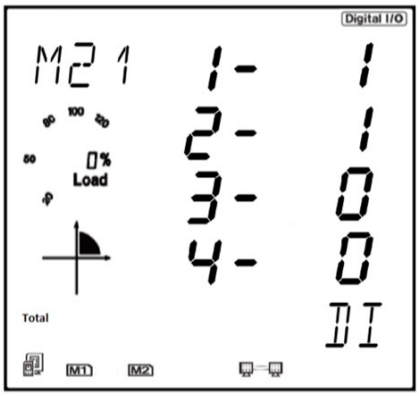

Figure 5-17 Digital Status Reading from Acuvim-L Display

Viewing the Digital status from the Acuview 2 software

The Digital Input mode can be configured from the Acuview 2 software, on the ***I/O Modules 1*** or ***I/O Modules 2*** page under the ***Setting*** tab. The difference between I/O pages 1 and 2 is based on the module's logic number. For example, if users have an AXM-IO3-2, they will configure the settings on I/O Modules 2 page.

The DI settings must be set to ***State*** to monitor the Digital Status. If any changes are made to the I/O settings, click on ***Update*** located at the top of the Settings page to save the configurations.

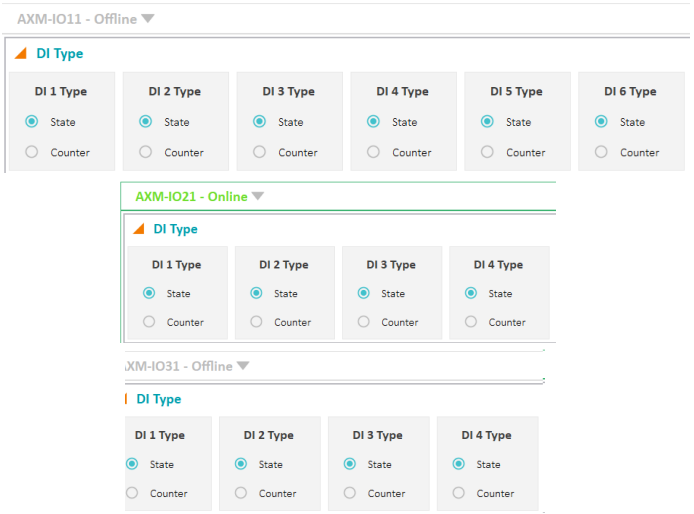

Figure 5-18 Digital Input Status Configuration

Under the ***Reading*** tab, select either ***I/O Modules 1 Reading*** or ***I/O Modules 2 Reading*** depending on the logic number of the I/O module being used. From there, users can see the digital input status on the software as either **ON** or **OFF**.

NOTE: AXM-IO1-1, AXM-IO2-1, and AXM-IO3-1 have logic number 1. AXM-IO1-2, AXM-IO2-2, and AXM-IO3-2 have logic number 2.

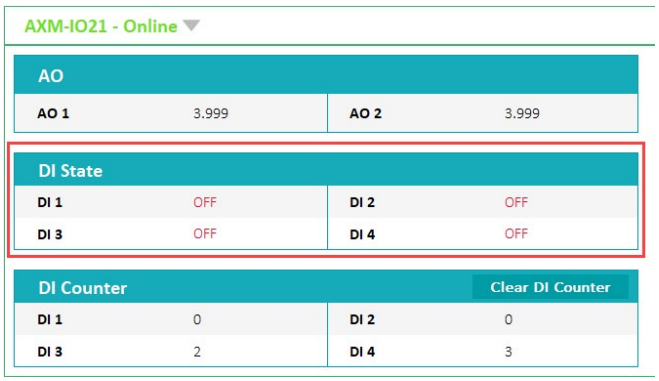

Figure 5-19 Digital Input Status Readings from the Acuview 2 Software

Sequence of Events Record (SOE)

When the Digital Input is configured to detect remote signals, users have the option to monitor the digital status change using the sequence of events log on the Acuvim-L meter. Users can select which I/O module to log the status change from the ***General*** page under the ***Setting*** tab in the software. The SOE can also be enabled from the meter's display in the system settings of the Acuvim-L meter. Refer to Chapter 3 for more details on configuring the settings from the display.

Users can select which module for recording the status change events, and they can also disable the SOE function by selecting ***None***.

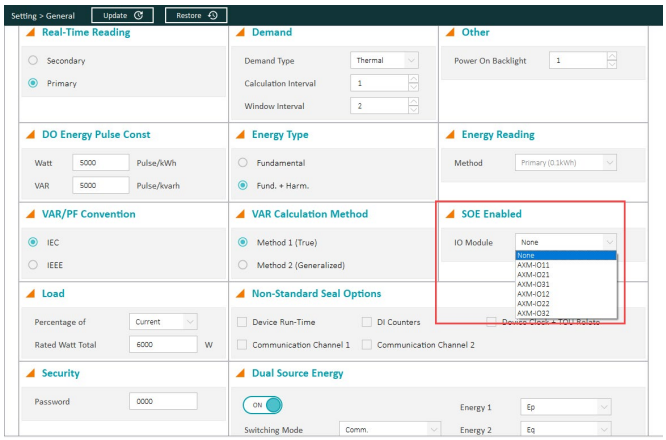

Figure 5-20 SOE Enable Configuration

SOE Records

The Sequence of Events log can record up to twenty events. When more than twenty events have been recorded, the SOE will overwrite the record with the oldest time stamp and continue recording. The SOE record includes the status from DI1 to DI6 as well as the time stamp for when the change occurred.

When the Acuvim-L series meter is powered, the SOE will begin to record immediately. The data in the SOE Log will not be lost even in the event of a power outage or shutdown.

When a new I/O module is selected to be recorded, the existing records will be overwritten immediately.

The SOE log can be read from the Acuview 2 software by selecting the ***SOE Log*** under the ***Reading*** tab.

NOTE: The Acuvim-L meter will only log SOE events when the DI is configured to Status mode. If the DI is configured to Pulse mode, there will be no change in the SOE Log.

Distributed by MicroDAQ, LLC
(603) 746-5524
www.microdaq.com

Reading > SOE Log Save To File

SOE Log

Latest SOE Record No 4 SOE Record From AXM-IO21

No.	Time Stamp	DI 1	DI 2	DI 3	DI 4	DI 5	DI 6
1	2000-01-02 02:52:08:223	OFF	OFF	OFF	ON	OFF	OFF
2	2000-01-02 02:52:08:383	OFF	OFF	OFF	OFF	OFF	OFF
3	2000-01-02 02:52:08:793	ON	OFF	OFF	OFF	OFF	OFF
4	2000-01-02 02:52:08:983	OFF	OFF	OFF	OFF	OFF	OFF
5	2000-01-02 02:51:13:188	OFF	ON	ON	ON	OFF	OFF
6	2000-01-02 02:51:14:253	OFF	OFF	ON	ON	OFF	OFF
7	2000-01-02 02:51:15:352	OFF	OFF	OFF	ON	OFF	OFF
8	2000-01-02 02:51:16:487	OFF	OFF	OFF	OFF	OFF	OFF
9	2000-01-02 02:51:18:371	ON	OFF	OFF	OFF	OFF	OFF
10	2000-01-02 02:51:18:377	ON	OFF	OFF	ON	OFF	OFF
11	2000-01-02 02:51:18:633	OFF	OFF	OFF	ON	OFF	OFF
12	2000-01-02 02:51:18:653	OFF	OFF	OFF	OFF	OFF	OFF
13	2000-01-02 02:51:19:469	OFF	OFF	ON	OFF	OFF	OFF
14	2000-01-02 02:51:19:473	OFF	ON	ON	OFF	OFF	OFF

Figure 5-21 SOE Log Readings

5.1.6 Pulse Counter

The DI channels can also be configured to count pulses. Once the appropriate DI channel is configured to count pulses, the meter will be able to show the pulse count on the meter's display or in the Acuview 2 software.

Viewing the Digital Input Pulse Count from the Meter's display:

- Press ***H*** and ***V/A*** at the same time. The screen will go blank, and ***Meter*** will be flashing.
- Press the ***P*** or ***E*** key to move the flashing cursor over to **Digital I/O** and press ***V/A*** to enter.
- Next, users will see the I/O selection screen. Select the appropriate I/O module and press ***V/A***.
- Press either ***P*** or ***E*** key to move the cursor down to ***CTR*** and press ***V/A*** to view the Digital Input Pulse Counter readings.
- Once on the Counter page, press ***P*** or ***E*** to navigate between different counters.

NOTE: Refer to Chapter 3 section 3.7.4 on how to configure the DI from the meter's display.

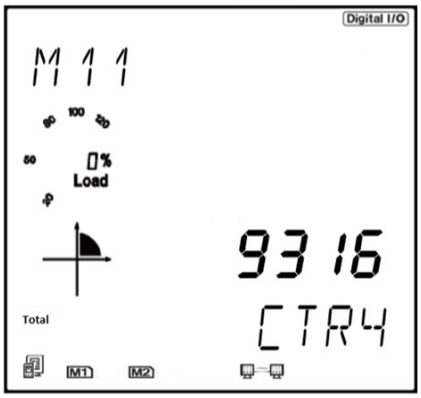

Figure 5-22 Digital Input Pulse Count from Meter's Display

NOTE: The counter value is read from top to bottom on the meter's display. For example, if the count value is 123456789, it will be displayed on the meter as 1 on the top line, 2345 on the second line, and 6789 on the bottom line.

How to view and configure the Pulse Input from the Acuview 2 software:

The Digital Input can be configured as Pulse Counter on the ***I/O Modules 1*** or ***I/O Modules 2*** page depending on the logic number of the module being configured. The DI mode must be set to ***Counter*** for the Digital Input to count the pulse signals. Users can also configure the pulse counter constant. This number represents how many pulses will equate to a single count on the Digital Input. The range for pulse counter constant is from 1 to 65535.

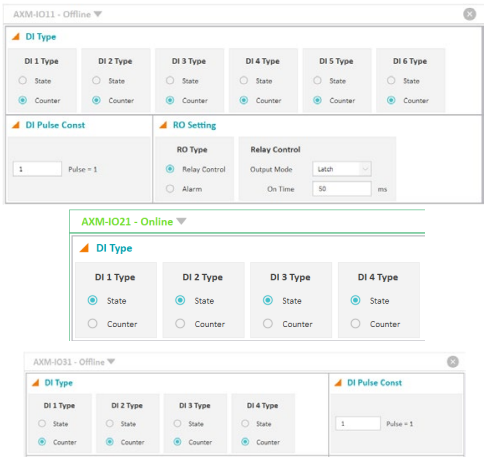

Figure 5-23 Pulse Counter Configuration from Acuview 2 Software

The DI pulse count data can be read on the Acuview 2 software from the ***Reading*** tab by selecting either ***I/O Modules 1 Reading*** or ***I/O Modules 2 Reading*** depending on the logic number of the module that is connected to the meter.

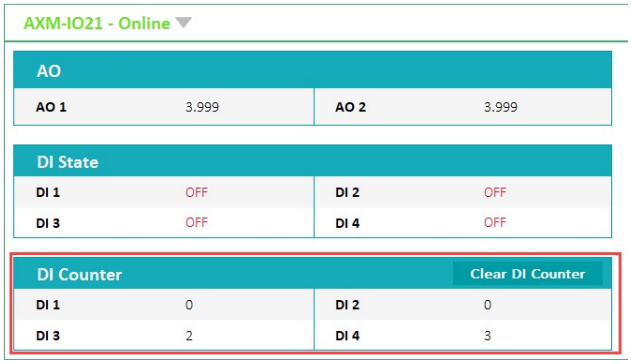

Fig 5-24 Pulse Counter Readings from the Acuview 2 Software

Clearing the Pulse Count

The pulse count can be cleared from the meter's display, Acuview 2 software, or by Modbus registers. For instructions on how to clear the pulse count using the meter's display, refer to Chapter 3. For instructions using Modbus, refer to Chapter 6.

To clear the pulse count from the Acuview 2 software, go to I/O Modules 1 Reading or I/O Modules 2 Reading page under the Reading tab. In the DI Counter reading section, click on Clear DI Counter button to clear the pulse count.

Distributed by MicroDAQ, LLC
(603) 746-5524
www.microdaq.com

Figure 5-25 Reset DI Counter from Acuview 2 software

5.1.7 Relay Output

The relay output is supported on the AXM-IO1 and AXM-IO3 modules. Users can read the relay output status from either the meter's display, Acuview 2 software, or by Modbus registers.

Reading Relay Output from Meter's Display:

- Press ***H*** and ***V/A*** at the same time. The screen will go blank, and **Meter** will be flashing.
- Press the ***P*** or ***E*** key to move the flashing cursor over to **Digital I/O** and press ***V/A*** to enter.
- Next, users will see the I/O selection screen, select the appropriate I/O module and press ***V/A***.
- Press either ***P*** or ***E*** to move the cursor down to ***RO*** and press ***V/A*** to view the Digital Input Pulse Counter readings.

By default, the relay will be in ***OFF*** state (normally open). When the relay output is triggered, the relay status will switch to ***ON***.

Figure 5-26 Relay Output Status Readings

How to view and configure the Relay Output from the Acuview 2 software:

The Relay Output settings can be configured from the Acuview 2 software on the ***I/O Modules 1*** or ***I/O Modules 2*** page under the ***Setting*** tab depending on the logic number of the I/O module being used. There are two RO types that the module can be configured to:

- **Relay Control:** When configured as relay control, users can manually switch the relay ON/OFF. After the relay is set to Relay Control, users should select one of the three additional RO Relay Control Output Mode: Latch, Momentary, or Manual.
  - **Latch:** When the control mode is set to Latch, the relay will maintain its current activation state until switched to ON/OFF manually by the user.
  - **Momentary:** When the control mode is set to Momentary, the relay will be switched ON for a certain time period, which can

be configured by the user. The range for this time period is from 50 to 3000 milliseconds (ms).

- **Alarm:** When configured as alarm, the relay will switch ON/OFF based on the alarm condition set in the Acuvim-L meter. Users can configure a certain alarm to trigger the relay if its value is over/under a certain condition.

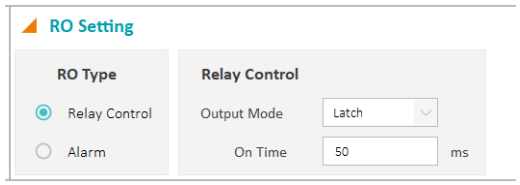

Figure 5-27 Relay Output Configuration from Acuview 2 Software

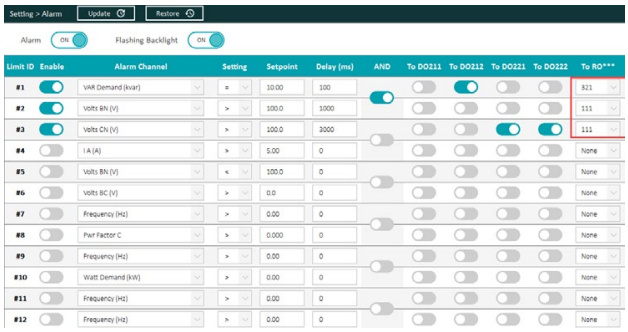

Figure 5-28 Alarm relay trigger configuration from Acuview 2 software.

To read the status of the relay output from the Acuview 2 software, click on either the ***I/O Modules 1 Reading*** or ***I/O Modules 2 Reading*** page under the ***Reading*** tab depending on the logic number of the I/O module being used. The relay status will read **ON** when the relay switch is closed and will read **OFF** when the relay switch is open.

If the relay is in Relay Control Mode, users can manually turn the relay ON/OFF from the Acuview 2 software by clicking on the ***Control*** button.

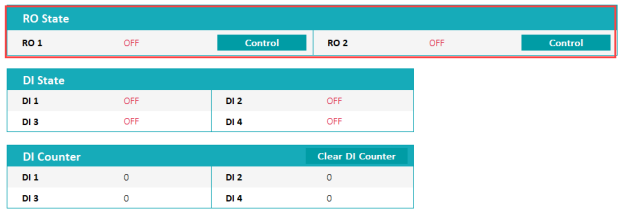

Figure 5-29 Relay Output Readings from Acuview 2 Software

5.1.8 Digital Output

The AXM-IO2 module supports the Digital Output and has two Digital Output channels that can be configured to either Alarm mode or Energy Pulse mode. The DO can be configured from the meter's display (refer to chapter 3), from the Acuview 2 software, or from the Modbus registers (refer to chapter 6).

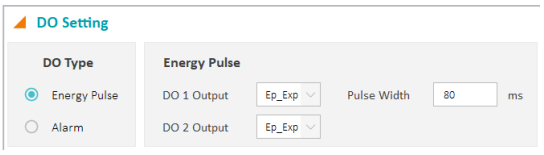

Figure 5-30 Digital Output Configuration from Acuview 2 Software

- **Energy Pulse:** In energy pulse mode, the DO will send pulses based on the energy accumulation that the meter is measuring. When selected, users can configure DO 1 and 2 Output to one of the following:

Distributed by MicroDAQ, LLC
(603) 746-5524
www.microdaq.com

- **Ep_Imp:** Import Energy
- **Ep_Exp:** Export Energy
- **Eq_Imp:** Import Reactive Energy
- **Eq_Exp:** Export Reactive Energy

- **Pulse Width:** Users can configure the pulse width from 20 to 1000ms, and the default pulse width is 80ms.
- **Alarm:** When configured in alarm mode, the module will send a pulse signal whenever the alarm is triggered.

When the meter sends a pulse signal, a pulse icon will appear on the meter's display. This icon will flash whenever a pulse signal is sent out from the digital output. Figure 5-31 shows where and how the pulse signal indicator is displayed.

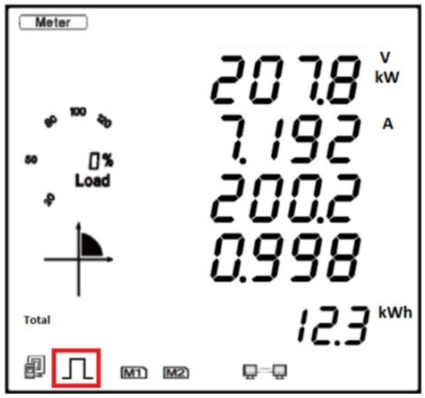

Figure 5-31 Pulse Signal Indicator on Meter's Display

Digital Output Pulse Constant Configuration

If the DO is configured for Energy Pulse Output mode, users will need to configure the pulse constant so that the meter will know how often to send a pulse signal out. To determine the correct pulse constant, users must know the rated current and rated voltage of their system. Below is an example on how to manually calculate the pulse constant.

Manual Pulse Constant Calculator:

The pulse constant must be configured for the meter to output the pulses accurately.

The following shows how to calculate the pulse constant manually:

- Determine how many pulses represent 1kWh, or how many kWh represents 1 pulse.

  Example 1 pulse = 1 kWh

- Multiply the PT ratio and CT ratio i.e., PT1/PT2 * CT1/CT2

  Example: PT ratio is 6600V/120V, and the CT ratio is 2000:5A.

$$\left(\frac{6600}{120}\right) \times \left(\frac{2000}{5}\right) = 22{,}000$$

NOTE: If no PTs are used, enter the default PT ratio of 400/400. If the CT2 output is 333mV, RCT, or 80/100/200mA, use 1 as the CT2 value.

- Divide 1kWh by 22,000, i.e., (1/22000) kWh
- This means 1 pulse = (1/22000) kWh; therefore 22000 pulses = 1 kWh
- Since we get 22000 pulse/kWh, 22000 is the pulse constant.

Once the pulse constant value has been calculated, users can configure the pulse constant setting from the setting menu in the meter's display (refer to chapter 3), via Modbus registers (refer to chapter 6), or Acuview 2 software.

In the Acuview 2 software, users can configure the pulse constant by clicking on the ***General*** page under the ***Setting*** tab. Users can configure the pulse constant for either real energy (Pulse/kWh) or reactive energy (Pulse/varh).

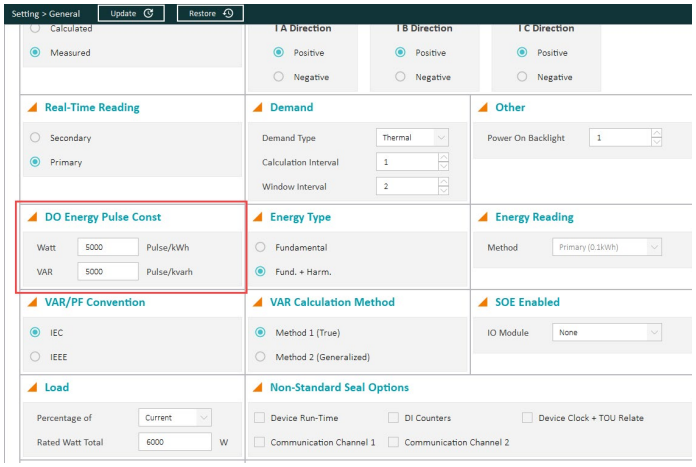

Figure 5-32 DO Energy Pulse Constant Configuration from Acuview 2 software

Pulse Constant Configuration using Pulse Calculator:

When accessing the meter using the Acuview 2 software, there is a pulse constant calculator tool that can be used to determine the correct pulse constant. Click on the ***Operation*** menu and select ***Calculate Pulse Constant.***

- Under the **PT and CT Ratios** section of the page, enter PT1 and PT2 which represent the rated input and output of the Potential Transformer (PT) that is being used with the meter. If PTs are not being used, leave these settings as default of 400 for both PT1 and PT2.
- Enter the CT1 and CT2 values which represent the rated input and output of the Current Transformer (CT) being used with the meter.
- Enter the value of the **Primary Maximum Power** by performing the following calculation: **3*(PT1*CT1)/1000**
- Next, enter the desired pulse width and minimum interval for the energy pulse. The range for the pulse width is 20 to 1000ms.
- Once all values are entered, click on ***Calculate***
- The calculator will return the Maximum/Minimum values for the number of pulses as well as how much one pulse will represent with the configured PT/CT ratios and Primary Maximum Power.
- In the ***'Primary: 1 Pulse ='***, enter the amount of energy (kWh) required to represent 1 pulse, then the pulse constant will be displayed in the ***'Secondary: 1 kWh(kvarh) ='*** section of the window.
- Once the pulse constant is determined, it will need to be configured in the general settings. From Figure 5-33, the pulse constant that is entered into the meter is 100.

Distributed by MicroDAQ, LLC
(603) 746-5524
www.microdaq.com

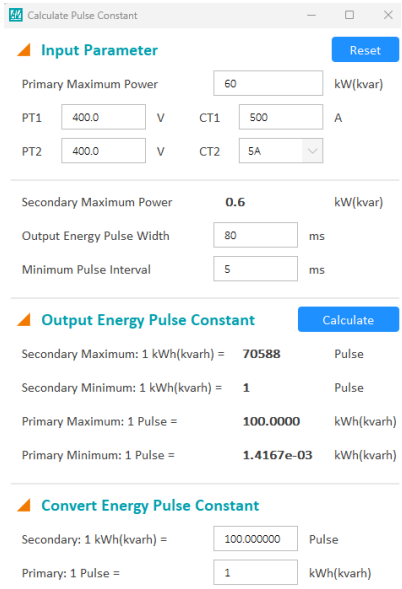

Figure 5-33 Pulse Constant Calculator from Acuview 2 software

5.1.9 Analog Output

The analog output is supported in the AXM-IO2 module where users can convert electrical parameters measured by the meter into an analog voltage (0-5V/1-5V) or current (0-20mA/4-20mA).

Viewing the Digital status from the Meter's Display:

- Press ***H*** and ***V/A*** at the same time. The screen will go blank, and Meter will be flashing.
- Press the ***P*** or ***E*** key to move the flashing cursor over to **Digital I/O** and press ***V/A*** to enter.
- Next, users will see the I/O selection screen. Select the appropriate I/O module and press ***V/A***.
- With the cursor on ***AO,*** press ***V/A*** to view the Analog Output readings.

NOTE: Refer to Chapter 3 section 3.7.4 on how to configure the AO from the meter's display.

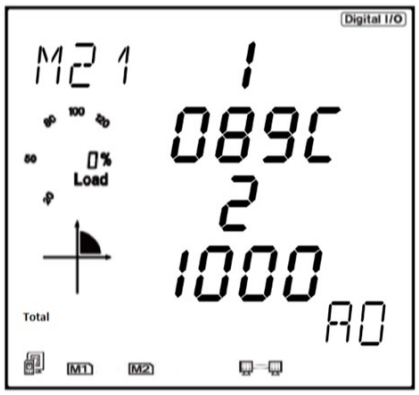

Figure 5-34 Analog Output readings from the meter's display

The values on the meter's display are in hex. The following equations will allow users to convert the displayed value to the corresponding current or voltage value. For example, using the equations below, the value of 089C for AO1 converts to 10.76mA or 2.69V, and the value of 1000 for AO2 converts to 20mA or 5V.

$$Real\ Value = \frac{Displayed\ value}{4096}\ x\ 20mA$$

$$Real\ Value = \frac{Displayed\ value}{4096}\ x\ 5V$$

Figure 5-35 Analog Output Conversion Equations

How to view and configure the Analog Output from the Acuview 2 software:

The Analog Output settings can be configured from the Acuview 2 software on the ***I/O Modules 1*** or ***I/O Modules 2*** page under the ***Setting*** tab depending on the logic number of the I/O module being used. There are two AO channels that can be configured under the ***Raw Channel of AO*** section.

- **AO1/AO2:** Can be set to any of the parameters in table 5-3
- **AO Type:** Can be set to 0-20mA/4-20mA (mA model) or 0-5V/1-5V (V model)

NOTE: The Setting Value in Table 5-3 refers to the value configured when setting the analog output from the meter's display.

Table 5-3 Analog Output Parameters

Setting Value	Parameter
0	Frequency
1	Phase A Voltage
2	Phase B Voltage
3	Phase C Voltage
4	Average Line-Neutral Voltage
5	Line Voltage AB
6	Line Voltage BC
7	Line Voltage CA
8	Average Line-Line Voltage
9	Phase A Current
10	Phase B Current
11	Phase C Current
12	Average Current
13	Neutral Current
14	Phase A Power
15	Phase B Power
16	Phase C Power
17	Total System Power
18	Phase A Reactive Power
19	Phase B Reactive Power
20	Phase C Reactive Power
21	Total Reactive Power
22	Phase A Apparent Power
23	Phase B Apparent Power
24	Phase C Apparent Power
25	Total Apparent Power
26	Phase A Power Factor
27	Phase B Power Factor
28	Phase C Power Factor
29	Total Power Factor

Distributed by MicroDAQ, LLC
(603) 746-5524
www.microdaq.com

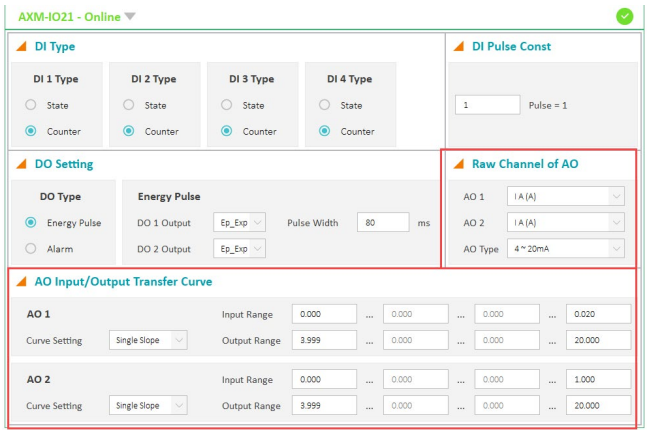

Figure 5-36 Analog Output settings

In the ***AO Input/Output Transfer Curve*** section, users can configure the scaling of the Analog Output signal relative to the parameter selected.

- **Single Slope:** When single slope is selected, only the minimum (X1) and maximum (X4) values are required to be specified to represent the AO signal. For instance, in the case of a 4-20mA signal, the minimum value of the parameter will be 4mA (Y1) and the maximum will be 20mA (Y2).
- **Dual Slope:** When dual slope is selected, the minimum (X1), maximum (X4), and middle point (X2) values are required to be specified to represent the AO signal. For instance, in the case of a 4-20mA signal, the minimum value of the parameter will be 4mA (Y1), the middle point of the parameter will be 12mA (Y2) and the maximum will be 20mA (Y2).
- **Triple Slope:** When the triple slope is selected, four points are required to be specified for both the input parameter and Analog Output. The four points should be configured in increasing order.

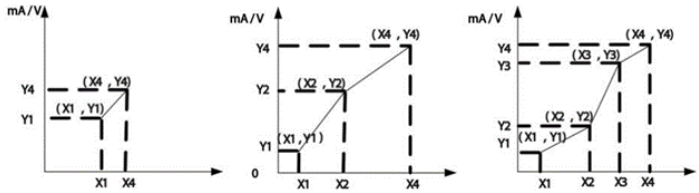

Figure 5-37 Relationship between analog output and electrical parameters

Certain parameters have a range that can be configured for the AO.

- Frequency: 45Hz to 65Hz
- Phase Voltage: V1, V2, V3, and Vavg: 0 to 480V
- Line Voltage: V12, V23, V31, and Vavg: 0 to 831V
- Current: I1, I2, I3, and Iavg depend on the current input of the meter
  - 5A: 0 to (CT1*10)/CT2 A
  - 1A: 0 to (CT1*10)/CT2 A
  - 333mV/RCT/mA: 0 to CT1/(CT2/10) A
- Power Factor: -1.0 to 1.0

- Power: -(3*480*I) to (3*480*I), where "I" is the CT1 value
  - Phase Power: -480*I to 480*I, where "I" is the CT1 value

NOTE: The maximum value of the AO will be 1.2 times the range. For example, 6V for analog voltage and 24mA for analog current.

NOTE: When the wiring mode of the meter is 2LL or 3LL, the phase measurements for the voltage, active, reactive, apparent power, and power factor will be 0.

Reading the Analog Output form the Acuview 2 software:

To read the value of the Analog Output from the Acuview 2 software, click on either the I/O ***Modules 1 Reading*** or ***I/O Modules 2 Reading*** page under the ***Reading*** tab depending on the logic number of the I/O module being used.

Figure 5-38 Analog Output readings on the Acuview 2 software

5.1.10 Analog Input

The AXM-IO3 module supports the Analog Input and has two Analog Input channels that can be configured to measure the input analog current (0-20mA/4-20mA) or voltage (0-5V/1-5V).

Viewing the Analog Input reading from the Meter's Display:

- Press ***H*** and ***V/A*** at the same time. The screen will go blank, and **Meter** will be flashing.
- Press the ***P*** or ***E*** key to move the flashing cursor over to **Digital I/O** and press V/A to enter.
- Next, users will see the I/O selection screen, select the appropriate I/O module and press ***V/A***.
- With the cursor on ***AI,*** press ***V/A*** to view the Analog Input readings.

NOTE: Refer to Chapter 3 section 3.7.4 on how to configure the AI from the meter's display.

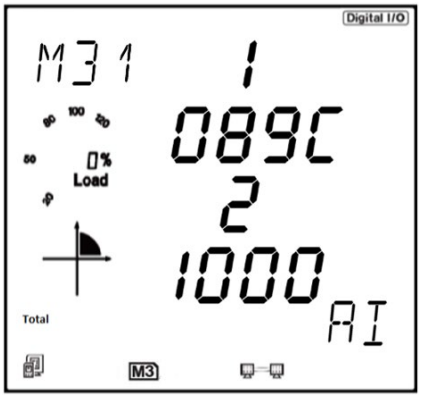

Figure 5-39 Analog Input Reading from the Meter's Display

Distributed by MicroDAQ, LLC
(603) 746-5524
www.microdaq.com

The analog input value can be displayed from the meter's display as a hex number. The AI value ranges from 0 to 4095.

The figure below shows the relationship between the AI value and the input analog value. Similar to the analog output, the displayed analog input value can be converted to the corresponding current or voltage value using the following equations.

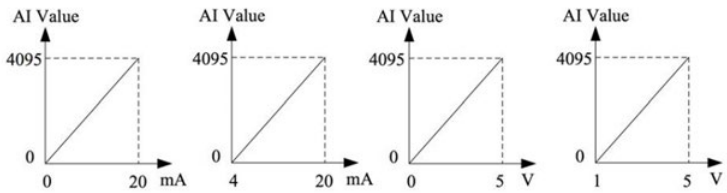

Figure 5-40 Relationship Between AI Value and Input Analog Value

$$Real\ Value = \frac{Displayed\ value}{4096}\ x\ 5V$$

$$Real\ Value = \frac{Displayed\ value}{4096}\ x\ 20mA$$

Figure 5-41 Analog Input Conversion Equation

Viewing the Analog Input Reading from the Acuview 2 software:

The Analog Input settings can be configured from the Acuview 2 software on the ***I/O Modules 1*** or ***I/O Modules 2*** page under the ***Setting*** tab depending on the logic number of the I/O module being used. Users can configure the input signal type. For the current type (mA) module, the input can be configured as 0-20mA/4-20mA. For the voltage type (V) module, the input can be configured as 0-5V/1-5V.

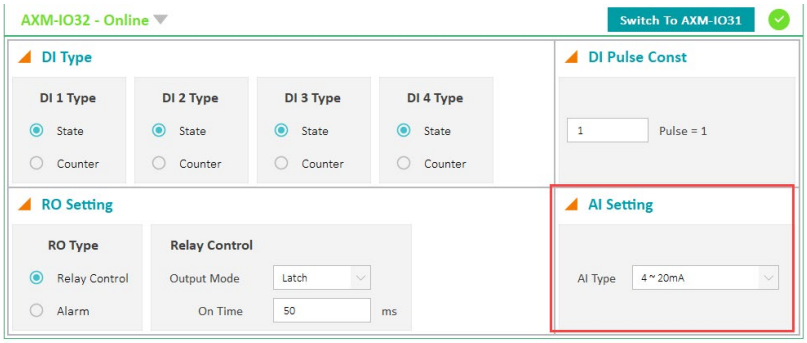

Figure 5-42 Analog Input Type Setting

Reading the Analog Input value from the Acuview 2 software:

Similar to the meter's display, the analog input value is read as a hex number and can be converted to the corresponding current or voltage signal.

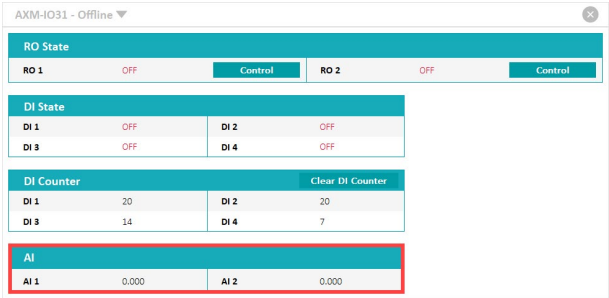

Figure 5-43 Analog Input Readings on the Acuview 2 Software

5.2 Profibus Module AXM-PROFI

5.2.1 Introduction of PROFIBUS Technology

Profibus (Process Field Bus) is an international field bus standard that is widely used in the automation technology of manufactures and the flow industry. It is a widely used, open digital communication system which is suitable for high speed, time-critical, and high-reliability communications.

PROFIBUS is an open style field bus standard introduced by SIEMENS Corporation. It was initially established as the German standard DIN19245 in 1989, then it became European standard EN50170 in 1996. Subsequently, it was accepted as part of the international standard IEC 61158 in 1999, and in 2001, it was recognized as the Chinese national standard JB/T 10308.3-2001 for field bus of machinery industry controlling systems.

There are three types of PROFIBUS: PROFIBUS-DP (Decentralized Periphery), PROFIBUS-PA (Process Automation), and PROFIBUS (Field bus Specification Message). All types follow the same protocol.

With optimized, high-speed, low-cost communication links, PROFIBUS-DP is especially used in automatic controlling systems and equipment level decentralized I/O communication. It can fulfill the requirements for real-time response, stability, and reliability at both equipment and distributed control system levels.

The PROFIBUS module uses the PROFIBUS-DP(V0) protocol.

5.2.2 PROFIBUS module application notes

Before using the AXM-PROFI, the users should read the PROFIBUS technical data and specifications. In addition, familiarity with the Modbus parameter addresses would be an asset.

The AXM-PROFI can only be used as a slave in the PROFIBUS network. The slave address can range from 0 to 126, which can only be set through the entrance. If the address is changed, it will take effect immediately.

The AXM-PROFI can operate with baud rates between 9600 to 12Mbps.

The AXM-PROFI terminals should be connected properly to avoid problems during installation.

Please read the GSD file of the PROFIBUS module carefully before using it. The GSD file contains technical information such as device name, ID number, and other important details.

Please contact Technical Support (support@accuenergy.com) to obtain the GSD file.

Distributed by MicroDAQ, LLC
(603) 746-5524
www.microdaq.com

5.2.3 Appearance and Dimensions

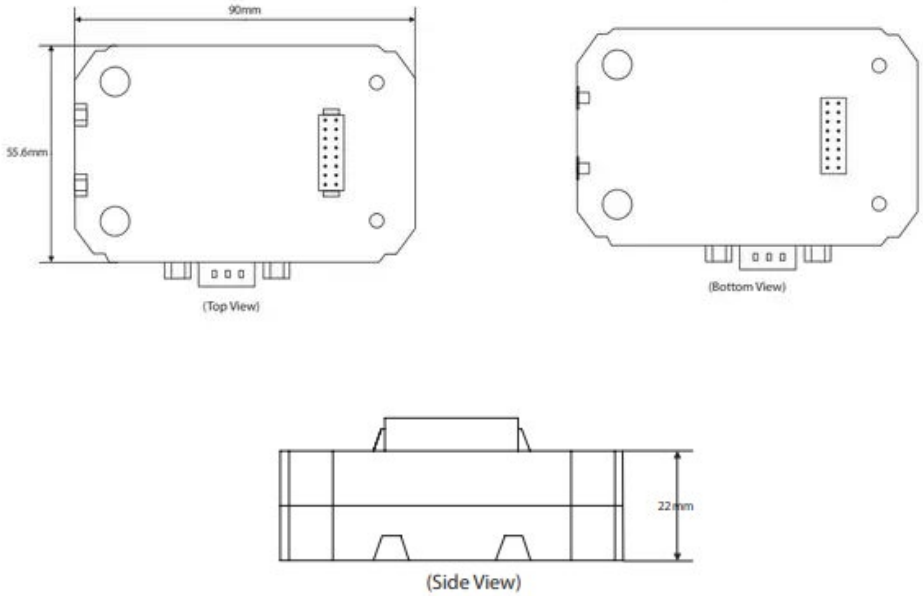

Figure 5-44 AXM-PROFI Dimensions

5.2.4 Installation Method

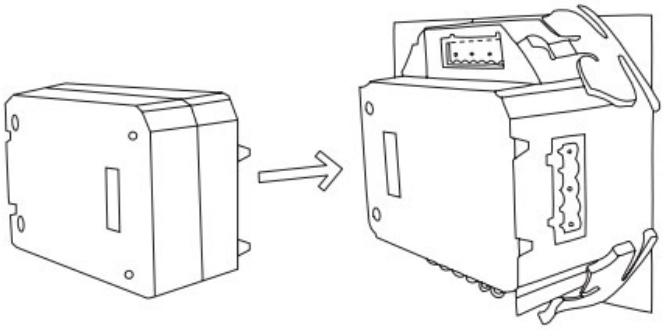

Figure 5-45 AXM-PROFI Installation to Acuvim-L Meter

The AXM-PROFI module can be attached to the Acuvim-L series meter by a communication plug. Other extension modules, such as the I/O modules, can be added to the Acuvim-L series meter through the AXM-PROFI.

1. Insert the installation clips to the counterpart of the Acuvim-L meter, and then press the AXM-PROFI module gently to establish the link.

2. Tighten the installation screws.

NOTE: Do not install any modules when power is applied to the meter.

5.2.5 Definition of DP Interface

The AXM-PROFI module uses a standard 9-pin, D-type connector to access the PROFIBUS network. The mechanical and electrical characteristics of the connector are consistent with the requirements of IEC 807-3. The PROFIBUS connector is a socket, and the counterpart connector of cable is a plug.

The connector pins are as followed:

Table 5-4 AXM-PROFI Connector Table

Pins	RS-485	ID	Content	Used by PROFIBUS
1	--	Shield	Power GND	NO
2	--	N24V	-24V output	NO
3	B	RXD/TXD-P	Data P (Receive/Send)	YES
4	--	CNTR-P	Controlling P	YES
5	C	DGND	Digital Ground	YES
6	--	Vp	Positive Voltage	YES
7	--	P24V	+24V output	NO
8	A	RXD/TXD-N	Data N (Receive/Send)	YES
9	--	CNTR-N	Controlling N	NO

NOTE: *Pin 4 is used for RTS controlling and TTL, which is optional.*

5.2.6 Cable

A shielded twisted pair cable is recommended as reference to the EIA RS-485 standard. If the interference is within the EIA RS-485 standard, then a non-shielded twisted pair cable may be used.

5.2.7 Bus Terminal

Based on the DP standard, the first station and the last station in the PROFIBUS-DP network should connect to the bus terminal (resistor) and it is not necessary for other stations, as shown in the figure below.

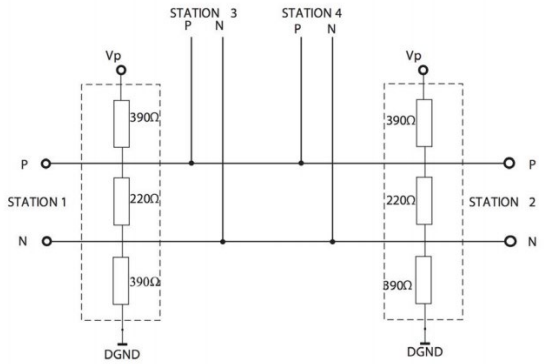

Figure 5-46 DP Station Connection Diagram

The bus terminal is composed of three resistors and a connection wire, where Vp is the supply positive voltage and DGND is the Digital Ground. When the bus is idle, the bus terminal makes the data P level higher than data N, so the bus's idle signal is always 1.

5.2.8 Address Setting

The AXM-PROFI module can only be used as a slave in the PROFIBUS network. Its slave address ranges from 0 to 126, which can only be configured from the meter's display. If the address is changed, it will take effect immediately.

The figure below shows the configuration setting for the AXM-PROFI.

Distributed by MicroDAQ, LLC
(603) 746-5524
www.microdaq.com

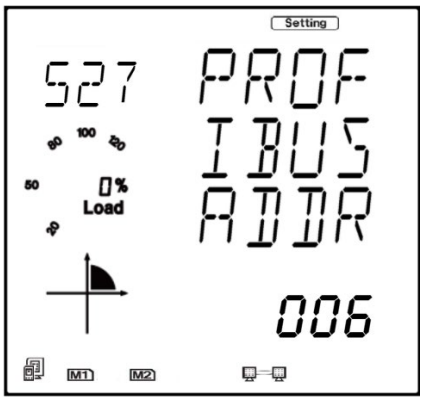

Figure 5-47 AXM-PROFI Address Setting on Meter's Display

5.2.9 Baud Rate

The AXM-PROFI supports baud rates from 9.6kbps to 12Mbps in the PROFIBUS network.

5.2.10 GSD Files

A PROFIBUS-DP Master can exchange data with various slave devices. To identify a slave device, it is not necessary to obtain the technical data of the device itself. The file where the data is described is called the Device Description Data File (GSD).

Because of the importance of the GSD file, please read it carefully before using the AXM-PROFI module. The GSD file is provided in pure text format with detailed comments.

- As a DP slave device, the AXM-PROFI module supports the protocol of V0 revision.
- The AXM-PROFI module data interface is optional. It supports module 1 and module 2. Module 1 is a 16-bit word input/output interface. Module 2 is a 32-bit input with 1 output interface.

5.2.11 Information Exchange

A variety of information from the Acuvim-L meter can be transmitted by the AXM-PROFI module, such as electrical measurements and other parameters. The basic communication method of the Acuvim-L series meter is RS-485, which uses the Modbus-RTU protocol. To use the same addresses as Modbus, the communication format of PROFIBUS-DP is 16-bit word input/output.

It is recommended to refer to the communication part of the Acuvim-L manual (Chapter 6) for the list of Modbus addresses, function codes, the relationship between values, and other details.

Some examples are:

1. Various function codes, such as 01H, 02H, 04H, 05H, and 10H, are used for different categorized parameters. Each function code corresponds to distinct formats for both the query and response frames.
2. There are specific relationships between numerical values in the registers and the real physical value.
3. Different parameters may have different data length and data type.

These three points are also suitable for the PROFIBUS-DP protocol in the AXM-PROFI modules

Function codes, such as 01H, 02H, and 03H, are inquiry commands. To quickly switch the inquiry contents, eight channels are defined ranging from 1 to 8.

5.2.12 Format of Function code 01H

Function code 01H is used to configure the read relay status. The format of this function code is defined as follows:

Query:

Table 5-5 Function Code 01H Query Format

	Frame Bytes	Caption
1	Byte 1	Channels 1 to 8
2	Byte 2	01H
3	Byte 3	Starting Address high byte
4	Byte 4	Starting Address low byte
5	Byte 5	Quantity of coils high byte
6	Byte 6	Quantity of coils low byte
7	Byte 7-32	0

Here, 16-bit words are usually required for I/O data in GSD file so that all other bytes after Byte 7 are set to 0.

Response:

Below is the response of the slave device sending its information to the master device.

Table 5-6 Function 10 Response Format

	Frame Bytes	Caption
1	Byte 1	The channel of inquiry frame
2	Byte 2	01H
3	Byte 3	byte count
4	Byte 4	coil status
5	Byte 5~32	0

In the response message, the coils are packed as one coil per bit in the data field. The status is indicated as follows: 1 represents ON and 0 represents OFF. The least significant bit (LSB) of the first data byte contains the output addressed in the query. The rest of the coils continue towards the high order end within this byte and proceed from the low order to the high order in subsequent bytes.

Example: reading Relay1 and Relay2 status (start register address is 0000H). Use 4 channels.

Query:

Byte1	Byte2	Byte3	Byte4	Byte5	Byte6	Byte7~32
04H	01H	00H	00H	00H	02H	00H

Response:

Byte1	Byte2	Byte3	Byte4	Byte5	Byte6	Byte7~32
04H	01H	01H	02H	00H	00H	00H

Coil Status:

7	6	5	4	3	2	1	0
0	0	0	0	0	0	1	0

MSB LSB

(Relay 1 = OFF, Relay 2=ON)

5.2.13 Format of function code 05H

The message with function code (05H) in MODBUS-RTU serves to activate or deactivate a single relay. The data value FF00H will set the relay ON, and the value 0000H will switch the relay OFF. Any other values are invalid and will not affect the status of relay. In

Distributed by MicroDAQ, LLC
(603) 746-5524
www.microdaq.com

PROFIBUS-DP, the format of function code 05H is defined as follows:

Query:

Table 5-7 Function Code 05H Query Format

	Frame Bytes	Caption
1	Byte 1	FAH
2	Byte 2	05H
3	Byte 3	outputs address high byte
4	Byte 4	outputs address low byte
5	Byte 5	outputs value high byte
6	Byte 6	outputs value low byte
7	Byte 7~32	0

NOTE: Because PROFIBUS-DP V0 exchanges information periodically, controlling information such as function code 05H should be used carefully.

Response:

The normal response to the command request is to re-transmit the message as received after the relay status has been altered.

Table 5-8 Function Code 05H Response Format

	Frame Bytes	Caption
1	Byte 1	FAH
2	Byte 2	05H
3	Byte 3	outputs address high byte
4	Byte 4	outputs address low byte
5	Byte 5	outputs value high byte
6	Byte 6	outputs value low byte
7	Byte 7~32	0

Example: setting Relay2 on.

Query:

Byte1	Byte2	Byte3	Byte4	Byte5	Byte6	Byte7~32
FAH	05H	00H	01H	FFH	00H	00H

Response:

Byte1	Byte2	Byte3	Byte4	Byte5	Byte6	Byte7~32
FAH	05H	00H	01H	FFH	00H	00H

5.2.14 Format of function code 02H

Function code 02H is used to read DI status in MODBUS-RTU. In PROFIBUS-DP, the format of function code 02H is defined as follows:

Query:

Table 5-9 Function Code 02H Query Format

	Frame Bytes	Caption
1	Byte 1	Channels can be chosen from 1 to 8
2	Byte 2	02H
3	Byte 3	starting address high byte
4	Byte 4	starting address low byte
5	Byte 5	quantity of digital inputs high byte
6	Byte 6	quantity of digital inputs low byte
7	Byte 7~32	0

Response:

Table 5-10 Function Code 02H Response Format

	Frame Bytes	Caption
1	Byte 1	The channel of inquiry frame
2	Byte 2	02H
3	Byte 3	byte count
4	Byte 4	inputs status1
5	Byte 5	inputs status2 (or 0)
6	Byte 6	inputs status3 (or 0)
7	Byte 7	inputs status4 (or 0)
8	Byte 8~32	0

In the response message, the digital inputs are packed as one input per bit in the data field. The status is indicated as follows: 1 represents ON and 0 represents OFF. The least significant bit (LSB) of the first data byte contains the input addressed in the query. The rest of the inputs continue towards the high order end within this byte and proceed from the low order to the high order in subsequent bytes.

Example: reading four DI statuses (starting address is 0000H). Use six channels.

Query:

Byte1	Byte2	Byte3	Byte4	Byte5	Byte6	Byte7~32
06H	02H	00H	00H	00H	04H	00H

Response:

Byte1	Byte2	Byte3	Byte4	Byte5~32
06H	02H	01H	06H	00H

DI Status:

7	6	5	4	3	2	1	0
0	0	0	0	0	1	1	0

MSB LSB

(DI1 = OFF, DI2=ON, DI3 = ON, DI4 = OFF)

5.2.15 Format of function code 03H

This function code 03H is used in MODBUS-RTU to read the contents of a contiguous block of holding registers in Acuvim-L meter. In PROFIBUS-DP, the format of function code 03H is defined as follows:

Query:

Table 5-11 Function Code 03H Query Format

	Frame Bytes	Caption
1	Byte 1	Channels can be chosen from 1 to 8
2	Byte 2	03H
3	Byte 3	starting address high byte
4	Byte 4	starting address low byte
5	Byte 5	quantity of registers high byte
6	Byte 6	quantity of registers low byte
7	Byte 7~32	0

"Quantity of registers" identifies how many words will be read.

Distributed by MicroDAQ, LLC
(603) 746-5524
www.microdaq.com

Response:

Table 5-12 Function Code 03H Response Format

	Frame Bytes	Caption
1	Byte 1	The channel of inquiry frame
2	Byte 2	03H
3	Byte 3	byte count
4	Byte 4	Register value1 high byte
5	Byte 5	Register value1 low byte
6	Byte 6	.....
7	Byte 7~32	.....

"Byte count" identifies how many bytes will be read.

In the response message, the register data is packed as two bytes per register, with the binary contents properly aligned with each byte. For each register, the first byte contains the high order bits and the second contains the low order bits.

NOTE: The response has a 16-word frame, so the maximum "quantity of registers" should be less than 15. Otherwise, it will return an error result.

Example: Reading three measured data (F, V1, V2) from Acuvim-L meter.

The data address of F includes 4000H and 4001H. The data address of V1 includes 4002H and 4003H. The data address of V2 includes 4004H and 4005H. (Uses 7 channels)

Query:

Byte1	Byte2	Byte3	Byte4	Byte5	Byte6	Byte7~32
07H	03H	40H	00H	00H	06H	00H

Response:

Byte1	Byte2	Byte3	Byte4	Byte5	Byte6	Byte7	Byte8
07H	03H	0CH	42H	48H	00H	00H	42H

Byte9	Byte10	Byte11	Byte12	Byte13	Byte14	Byte15	Byte16~32
C7H	CCH	CDH	42H	C8H	33H	33H	00H

(F=42480000H(50.00Hz), V1=42C7CCCDH(99.9v), V2=42C83333H(100.1v)).

Note: The relationship between the numerical value in the register of the meter and the actual physical value is described in Chapter 6.

5.2.16 Format of function code 10H

This function code 10H is used in MODBUS-RTU to write a block of continuous registers in the Acuvim-L meter, such as system parameters setting and so on. In PROFIBUS-DP, the format of function code 10H is defined as follows:

Query:

Table 5-13 Function Code 10H Query Format

	Frame Bytes	Caption
1	Byte 1	FAH
2	Byte 2	10H
3	Byte 3	starting address high byte
4	Byte 4	starting address low byte
5	Byte 5	quantity of registers high byte
6	Byte 6	quantity of registers low byte
7	Byte 7	byte count
8	Byte 8	register value 1 high byte

	Frame Bytes	Caption
9	Byte 9	register value 1 low byte
10	Byte 10	register value 2 high byte
11	Byte 11	register value 2 low byte
12	.....	.....
13	Byte 32	0

"Quantity of registers" indicates how many words will be written.

"Byte count" indicates how many bytes will be written. If the "quantity of register" is N, then "byte count" is (N×2).

NOTE: The response has a 16-word frame, so the maximum "quantity of registers" should be less than 13. Otherwise, it will return an error result.

Response:

The normal Response returns the function code, starting address, and quantity of registers written.

Table 5-14 Function Code 10H Response Format

	Frame Bytes	Caption
1	Byte 1	FAH
2	Byte 2	10H
3	Byte 3	starting address high byte
4	Byte 4	starting address low byte
5	Byte 5	quantity of registers high byte
6	Byte 6	quantity of registers low byte
7	Byte 7~32	0

Example: Preset the import active energy (EP_imp) to 17807783.3 KWh. Based on the relationship between the register value and the physical value, we can get the register value in hex as 0A9D4089H. The data address of EP_imp includes 4048H and 4049H.

Query:

Byte1	Byte2	Byte3	Byte4	Byte5	Byte6	Byte7	Byte8	Byte9	Byte10	Byte11	Byte12~32
FAH	10H	40H	48H	00H	02H	04H	0AH	9DH	40H	89H	00H

Response:

Byte1	Byte2	Byte3	Byte4	Byte5	Byte6	Byte7~32
FAH	10H	40H	48H	00H	02H	00H

Example Projects

To facilitate your understanding of the PROFIBUS module, we have developed a PLC-based DEMO engineering application program. Please read the DEMO procedure documentation for specific information. This DEMO is available upon request, please contact Technical Support.

5.2.17 32 Word Output Interface

The 32-word output interface is a fixed parameter.

Transmission format is as follows:

Ua_rms(2 bytes), Ub_rms(2 bytes), Uc_rms(2 bytes), Uavg_rms(2 bytes);

Uab_rms(2 bytes), Ubc_rms(2 bytes), Uca_rms(2 bytes), Ulag_rms(2 bytes);

Distributed by MicroDAQ, LLC
(603) 746-5524
www.microdaq.com

Ia_rms(2 bytes), Ib_rms(2 bytes), Ic_rms(2 bytes), Iavg_rms(2 bytes);

Pa_rms(2 bytes), Pb_rms(2 bytes), Pc_rms(2 bytes), Pavg_rms(2 bytes);

Epa_imp(4 bytes), Epa_exp(4 bytes);

Epb_imp(4 bytes), Epb_exp(4 bytes);

Epc_imp(4 bytes), Epc_exp(4 bytes);

Ep_imp(4 bytes), Ep_exp(4 bytes);

5.3 RS485 Module (AXM-RS485)

5.3.1 Communication Parameters Setting

RS485, also known as EIA-485, is a telecommunications standard for binary serial communications between devices. RS485 is the most versatile communication standard in the standard series defined by the EIA, and it is a widely used communication interface in data acquisition and control applications where multiple nodes communicate with each other.

The RS485 signals are floating, and each signal is transmitted over a differential signal + line and a differential signal - line. The RS485 receiver compares the voltage difference between both lines, instead of the absolute voltage level on a signal line. To enhance communication performance, the differential signal + and differential signal - lines are twisted. The twisted pair adds immunity against noise. If high noise immunity is needed, the combination of twisting and shielding is often used. For example, shielded twisted pair or foiled twisted pair networking cables can be used in high noise environment.

5.3.2 Function Description of RS485 module

The AXM-RS485 module uses RS485 serial communication and the Modbus-RTU protocol, just like the on-board RS485 port of the Acuvim-L series meter. It provides a second RS485 port for serial communication, and it can work with the on-board RS485 serial communication simultaneously. The terminals of communication are generally A, B, and S, where A is for the differential signal +, B is for the differential signal -, and S is connected to the shield of the twisted pair cables.

- Up to 32 devices can be connected on an RS485 bus without repeaters.
- Use good quality shielded twisted pair cable, AWG22 (0.324mm^2) or higher.
- The overall length of the RS485 cable connecting all devices should not exceed 1200m (4000ft).
- Every A(+) should be connected to A(+), B(-) to B(-). Otherwise, it will influence the network or even damage the communication interface.
- When using a long communication cable to connect several devices, an anti-signal reflecting resistor (typical value 120Ω-300Ω/0.25W) is normally added to the end of the cable beside the last meter to prevent communication quality degradation.

5.3.3 Appearance and Dimensions

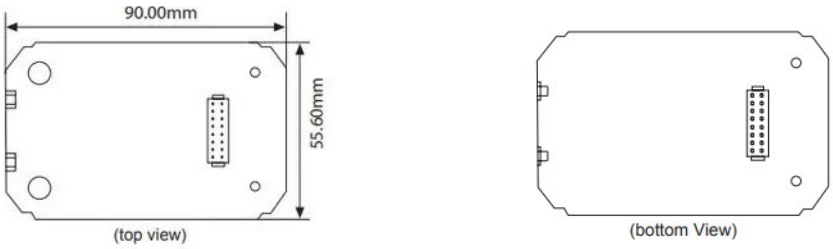

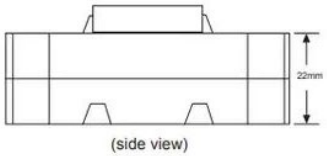

Figure 5-48 AXM-RS485 Dimensions

5.3.4 Installation Method

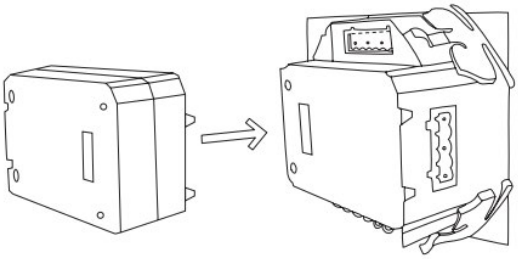

Figure 5-49 AXM-RS485 Installation to Acuvim-L Meter

The RS485 module is linked to the meter by a communication plug. It also can be linked to other extended modules.

1. Insert the installation clips to the counterpart of the meter, and then press the RS485 module gently to establish the link.
2. Tighten the installation screws.

NOTE: Install AXM-RS485 Module carefully to avoid damage. Under no circumstances should any installation be done with the meter powered on. Failure to do so may result in personal injury or death.

5.3.5 Connection Method

The RS485 module uses 2-wire, half-duplex communication mode, which is the same as what the on-board RS485 port is using. If the master does not have an RS485 communication port, a converter (such as an RS232/RS485 or a USB/RS485 converter) will be required. Typical RS485 Network topologies include line, circle, and star. The shield of each segment of the RS485 cable must be connected to the ground at one end only.

The default baud rate of the RS485 module is 38400 bps. Users can change the baud rate in system settings S03 of the Acuvim-L series meter.

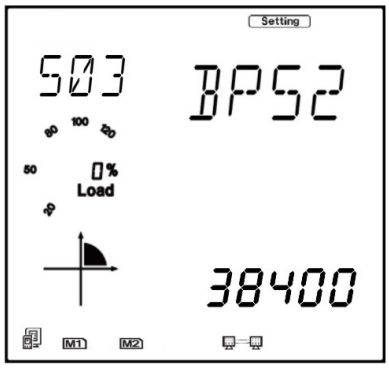

Figure 5-50 Baud Rate setting for the AXM-RS485 module

The data format is **start bit + 8n data bit + parity + stop bit.** NON1, NON2, odd and even can be selected for parity mode on S31 of Setting page of Acuvim-L meter.

Distributed by MicroDAQ, LLC
(603) 746-5524
www.microdaq.com

- **NON1:** represents non-parity, single stop bit
- **NON2:** represents non-parity, double stop bit
- **Odd:** represents odd-parity, single stop bit
- **Even:** represents even parity, single stop bit.

The default setting for the parity is NON1.

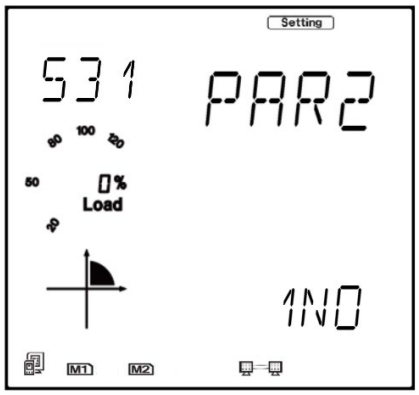

Figure 5-51 Parity Setting for the AXM-RS485 Module

NOTE: If AXM-WEB2 is used, the RS-485 module's parity (PAR2) must be set as None1 so that the meter will recognize the communication module.

5.3.6 Communication Address

The communication address used for the AXM-RS485 module would be located on page S36.

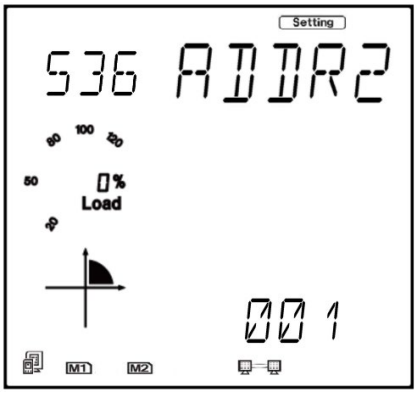

Figure 5-52 Address Setting for AXM-RS485

Chapter 6: Communication Part I

This chapter will mainly discuss how to communicate using the Modbus protocol. It is highly recommended to read the previous chapters before proceeding to Chapter 6. Familiarity with Modbus would also be helpful.

6.1 Modbus Protocol Introduction

Modbus RTU is the communication protocol used in Acuvim-L series meters. Data format and error check methods are defined in the Modbus protocol. The half-duplex query and respond mode is adopted in the Modbus protocol. There is only one master device in the communication network. The others are slave devices, waiting for the query of the master.

Transmission Mode

The mode of transmission defines the data structure within a frame and the rules used to transmit data. The mode is defined in the following which is compatible with Modbus RTU mode.

Framing

Table 6-1 Data Framing

Address	Function	Data	Check
8-Bits	8-Bits	Nx8-Bits	16-Bits
Coding System		**8-Bit Binary**	
Start Bit		1	
Data Bits		8	
Parity		No parity, odd parity, even parity	
Stop Bit		1 or 2	
Error Checking		CC check	

Address Field

The address field of a message frame contains eight bits. Valid slave device addresses are within the decimal range of 0 to 247. In the communication, a master addresses a slave by placing the slave address in the address field of the message. When the slave sends its response, it places its own address in this address field of the response to allow the master to identify which slave is responding.

Function Field

The function code field of a message frame contains eight bits. Valid codes are within decimal the range of 1 to 255. When a message is sent from a master to a slave device, the function code field informs the slave the type of action to perform.

Table 6-2 Function Code Transmission

Code	Meaning	Action
01	Read Relay Output Status	Obtain current status of Relay Output
02	Read Digital Input (DI) Status	Obtain current status of Digital Input
03	Read Data	Obtain current binary value from one or more registers
05	Control Relay Output	Force relay state to “ON” or “OFF”
16	Press Multiple-Register	Place specific binary values into a series of consecutive Multiple-Registers

Distributed by MicroDAQ, LLC
(603) 746-5524
www.microdaq.com

Data Field

The data field is constructed using sets of two hexadecimal digits, in the range of 00 to FF hexadecimal. The data field messages sent from a master to slave devices contains additional information for the slave to take a specific action defined by the function code. This can include items such as register addresses, the quantity of items to be handled, and the count of actual data bytes presented in the field. For example, if the master writes to a group of registers in the slave (function code 10 hexadecimal), the data field specifies to the starting register how many registers to write, the count of data bytes to follow in the data field, and the data to be written into the registers.

If no error occurs, the data field of a response from a slave to a master contains the data requested. If an error occurs, the field will contain an exception code that the master application can use to determine the next action to be taken. The data field can be nonexistent (when the length is zero) in certain types of messages.

Error Check Field

Every message incorporates an error checking field based on the Cyclical Redundancy Check (CRC) method. The CRC field checks the contents of the entire message. It is applied regardless of any parity check method that is used for the individual characters of the message. The CRC field is two bytes long, containing a 16-bit binary value. The CRC value is calculated by the transmitting device and is appended to the message. The receiving device recalculates the CRC value during reception of the message and compares the calculated value to the actual value it received in the CRC field. If the two values are not equal, an error will be reported. CRC calculation begins initializing the 16-bit register to 1's. The process involves sequentially applying 8-bit bytes of the message to the current register contents. Only the eight bits of data in each character are used for the CRC generation; Please note that start and stop bits and the parity bit do not apply to the CRC. When generating the CRC, each 8-bit character is exclusive "ORed" with the register contents. The result is shifted towards the least significant bit (LSB), with a zero filled into the most significant bit (MSB) position. The LSB is extracted and examined, and if the LSB equals to 1, the register is exclusive "ORed" with a preset fixed value; if the LSB equals to 0, no action will be taken. This process is repeated until eight shifts have been performed. After the last (eighth) shift, the next 8-bit byte is exclusive ORed with the register's current value, and the process repeats for eight more shifts as the process described above. After all the bytes of the message have been applied, the final contents of the register, which should exchange the high-byte and the low-byte, is the CRC value. When the CRC is appended to the message, the low-order byte is appended first, followed by the high-order byte.

6.2 Communication Format

Table 6-3 Explanation of Frame

Address	Function	Data start register HI	Data start register LO	Number of data start registers HI	Number of data start registers LO	CRC 16 HI	CRC 16 LO
06H	03H	00H	00H	00H	21H	84H	65H

1. Reading Relay Status

Function Code 01

This function code is used to read the status of the relay in the meter.

1=On, 0=Off, Relay1's address is 0000H,

Relay2's address is 0001H and so on.

The following query is to read the relay status for the meter with communication address 17.

Distributed by MicroDAQ, LLC
(603) 746-5524
www.microdaq.com

Query:

Table 6-4 Read the Status of Relay1 and Relay2 Query Message

Address	Function	Data start register HI	Data start register LO	Number of data start registers HI	Number of data start registers LO	CRC 16 HI	CRC 16 LO
11H	01H	00H	00H	00H	02H	BFH	SBH

Response:

The Acuvim-L series meter response includes the meter address, function code, quantity of data byte, the data, and error checking. An example response for reading the status of Relay1 and Relay2 is shown as Table 6-5. The status of Relay1 and Relay2 are responding to the last 2 bits of the data.

Relay1: bit0, Relay2: bit1

Table 6-5 Relay Status Response

Address	Function	Byte Count	Data	CRC 16 HI	CRC 16 LO
11H	01H	01H	02H	D4H	89H

The content of the data is:

7	6	5	4	3	2	1	0
0	0	0	0	0	0	1	0
MSB							LSB

Relay1 = OFF (LSB), Relay2 = ON (Left to LSB)

2. Read Status of DI

Function Code 02 1=ON, 0=OFF

DI's address is 0000H, D12's address is 0001H, and so on.

The following query is to read the status of four DI's from Acuvim-L series meter with communication address 17.

Query:

Table 6-6 Read the Status of Relay1 and Relay2 Query Message

Address	Function	Data start register HI	Data start register LO	Number of data start registers HI	Number of data start registers LO	CRC 16 HI	CRC 16 LO
11H	02H	00H	00H	00H	04H	7BH	59H

Response:

The Acuvim-L series meter response includes the meter address, function code, quantity of data characters, the actual data characters, and error checking. An example response of reading the status of four DIs is shown in Table 6-7 below. The DI status corresponds to the last 4 bits of the data.

DI1: bit0; DI2: bit1; DI3: bit2; DI4: bit3

Table 6-7 Relay Status Response

DI1: bit0		DI2: bit1		DI3: bit2		DI4: bit3
Transaction Identifier HI	Transaction Identifier LO	Protocol Identifier Hi	Protocol Identifier LO	Length HI	Length LO	Unit Identifier

Distributed by MicroDAQ, LLC
(603) 746-5524
www.microdaq.com

11H	02H	00H	00H	00H	04H	7BH

Function	Byte Count	Data
02H	01H	0FH

The content of the data is:

7	6	5	4	3	2	1	0
0	0	0	0	1	1	1	1
MSB							LSB

3. Read Data (Function Code 03)

Query:

This function allows the master to obtain the measurement results from the Acuvim-L series meter. Table 6-8 is an example of reading the measured data (F, V1 and V2) from slave device number 17. The data address of F is 4000H; V1's address is 4002H, 4003 and V2's address is 4004H, 4005H.

Table 6-8 Read F, V1, V2 Query Message

Address	Function	Data start register HI	Data start register LO	Number of data start registers HI	Number of data start registers LO	CRC 16 HI	CRC 16 LO
11H	03H	40H	00H	00H	06H	D2H	98H

Response:

The Acuvim-L series meter response includes the meter address, function code, quantity of data bytes, data, and error checking. An example response of the reading F, V1 and V2 (F=42480000H (50.00Hz), V1=42C7CCCDH (99.9V), V2=42C83333H (100.1V)) is shown in Table 6-9 below:

Table 6-9 Read F, V1 and V2 Message

Address	Function	Byte Count	Data1 HI	Data1 LO	Data2 HI	Data2 LO	Data3 HI	Data3 LO	Data4 HI	Data4 LO
11H	3H	0CH	42H	48H	00H	00H	42H	C7H	CCH	CDH

Data5 HI	Data5 LO	Data6 HI	Data6 LO	Data16 HI	Data16 LO
42H	C8H	33H	33H	CAH	7FH

4. Control Relay (Function Code 05)

Query:

This message is designed to activate or deactivate a relay. It is capable of switching any relay within the Acuvim-L series meter to either "ON" or "OFF" states. The data value FF00H can be used to set the relay to the "ON" state, and the value 0000H can be used to switch the relay to "OFF" state. Any other values will be considered invalid and will have no impact on the relay's status.

The example below is a request to the Acuvim-L series meter with the address of 17 to turn on Relay1.

Table 6-10 Control Relay Query Message

Address	Function	DO Address HI	DO Address LO	Value HI	Value LO	CRC 16 HI	CRC 16 LO
11H	05H	00H	00H	FFH	00H	8EH	AAH

Response:

The normal response to the command request is to re-transmit the message as received after the relay status has been altered.

Table 6-11 Control Relay Response Message

Address	Function	Relay Address HI	Relay Address LO	Value HI	Value LO	CRC 16 HI	CRC 16 LO
11H	05H	00H	00H	FFH	00H	8EH	AAH

5. Preset/Reset Multi-Register (Function Code 16)

Query:

Function code 16 allows the user to modify the contents of a multi-register. Some registers of the Acuvim-L series meter can have their contents changed by this message. The example below is a request to an Acuvim-L series meter with the address of 17 to preset Ep_imp as "17807783.3kWh", while its corresponding hexadecimal value being 0A9D4089H. Ep_imp data address is 4048H and 4049H.

Table 6-12 Preset Multi-Registers Query Message

Address	Function	Data start register HI	Data start register LO	Number of data start registers HI	Number of data start registers LO	Byte Count
11H	10H	40H	48H	00H	02H	04H

Value	Value LO	Value LO	Value LO	CRC HI	CRC LO
0AH	9DH	40H	89H	F1H	6AH

Response:

The normal response to a preset multi-register request includes the Acuvim-L series meter address, function code, data start register, the number of registers, and error checking.

Table 6-13 Preset Multi-Register Response Message

Address	Function	Data start register HI	Data start register LO	Number of data start registers HI	Number of data start registers LO	CRC 16 HI	CRC 16 LO
11H	10H	40H	48H	00H	02H	D6H	8EH

6.3 Data Address Table and Application Details

There are several rules to follow in using the meter:

6.3.1 Data Type

- "word" represents a 16-bit unsigned integer, using one data address and occupying 2 bytes of memory. Its range spans from 0 to 65535.
- "int" represents a 16-bit integer, using one data address and occupying 2 bytes of memory. Its range spans from -32768 to 32767.
- "dword" represents a 32-bit unsigned integer, using two data addresses and occupying 4 bytes of memory. This is organized with the high word at the front and the low word at the end. Its range spans from 0 to 4294967295. The value is calculated as Rx = high word*65536 + low word.
- "float" represents a 32-bit single value, using two data addresses and occupying 4 bytes of memory. Its range spans from -1.175494E-38 to 3.402823E+38.

6.3.2 Relationship Between Communication Value and Numerical Value.

It is important to note that the numerical value may not be the same as the communication value. Table 6-14 shows how they respond to each other.

Distributed by MicroDAQ, LLC
(603) 746-5524
www.microdaq.com

- When current output CTs are selected, the value of CT2 is 1A or 5A. When using the relationship of parameters listed in Table 6-14 to determine primary value, the value of CT2 used for the calculation should be the original 1 or 5.
- In situations where CT has a voltage output and the value of CT2 is 333mV, when using the relationship of parameters listed in the Table 6-14 to determine primary value, the value of CT2 used for the calculation should be 1 instead of 333.
- When using Rogowski Coil CTs (output 100mV/50Hz or 120mV/60Hz), the value of CT2 is 100. When using the relationship of parameters listed in Table 6-14 to determine primary value, the value of CT2 should be 1 instead of 100.

Table 6-14 Relationship of Parameters

Parameters	Relationship	Unit	Format Code
System parameters	Numerical value equals to communication value	No unit	F1
Run-time	T=Rx/100	Hour	F2
Clock	Numerical value equals to communication value	Unit of time	F3
Energy (primary)	Ep=Rx/10	kWh	F4
Reactive energy (primary)	Ep=Rx/10	kvarh	F5
Apparent energy (primary)	Ep=Rx/10	kVA	F6
Energy (secondary)	Ep=Rx/1000	kWh	F7
Reactive energy (secondary)	Ep=Rx/1000	kvarh	F8
Apparent energy (secondary)	Ep=Rx/1000	kVA	F9
Frequency	Ep=Rx/100	Hz	F10
Voltage	U=Rx×(PT1/PT2)/10	V	F11
Current, current demand	I=Rx×(CT1/CT2)/1000	A	F12
Power, demand	P=Rx×(PT1/PT2)×(CT1/CT2)	W	F13
Reactive power, demand	Q=Rx×(PT1/PT2)×(CT1/CT2)	Var	F14
Apparent power, demand	S=Rx×(PT1/PT2)×(CT1/CT2)	VA	F15
Power factor	PF=Rx/100	No unit	F16
Unbalance factor	Unbl=(Rx/1000)×100%	No unit	F17
THD	THD=(Rx/10000)×100%	No unit	F18
Harmonics	HDn=(Rx/10000)×100%	No unit	F19
Total odd HD	HDo=(Rx/10000)×100%	No unit	F20
Total even HD	HDe=(Rx/10000)×100%	No unit	F21
Crest factor	CF=Rx/1000	No unit	F22
K factor	KF=Rx/10	No unit	F23
THFF	THFF=(Rx/10000)×100%	No unit	F24
Phase angle	Phase angle=Rx/10	Degree	F25

IMPORTANT NOTE: Regions from "System parameters settings" to "Data logging 3 settings" are the regions that can be set and modified. Please follow these guidelines when communicating with the meter.

1. When using function code 10H, it is important to note that a single communication command is capable of modifying contents within only one region. These regions include "System parameters settings", "System status parameter", "Date and time registers", "Over/under limit alarming - Global settings", "Over/under limit alarming - settings", I/O Modules settings", "Data logging 1 settings", "Data logging 2 settings", and "Data logging 3 settings". It is important to note that the modification of contents in multiple regions cannot be achieved within a single communication order.
2. When using function code 03H, the rules and limitations described above will not be applied.

6.3.3 System Parameter Setting

System parameters determine how the meter works. Please refer to Chapter 3 and Chapter 4 for more details.

Distributed by MicroDAQ, LLC
(603) 746-5524
www.microdaq.com

Function code: 03H for reading, 10H for writing.

Data type: word

Table 6-15 System Parameters

System Status 03H Read, 10H Write						
Address(H)	**Address(D)**	**Parameter**	**Range**	**Default**	**Data Type**	**Access Property**
0FFDH	4093	Frequency Selection	0: 50Hz 1: 60Hz	1	Word	R/W
0FFEH	4094	Channel 1 Communication Protocol	0: Modbus 2: BACnet MS/TP	0	Word	R/W
0FFFH	4095	Channel 1 Parity	0: Even 1: Odd 2: None2 3: None1	3	Word	R/W
1000H	4096	Password	0~9999	0	Word	R/W
1001H	4097	Channel 1 Address	1~247 (Modbus)	1	Word	R/W
1002H	4098	Channel 1 Baud Rate	2400~115200	19200	Word	R/W
1003H	4099	Voltage Input Wiring Type	0: 3LN 1: 1LN 2: 2LL 3: 3LL 4: 1LL	0	Word	R/W
1004H	4100	Current Input Wiring Type	0: 3CT 1: 1CT 2: 2CT	0	Word	R/W
1005H	4101	PT1 (High 16 bit)	50.0~1000000.0	0	Word	R/W
1006H	4102	PT2 (Low 16 bit)		400	Word	R/W
1007H	4103	PT2	50.0~400.0	400	Word	R/W
1008H	4104	CT1	Depending on meter CT type **CT Type 1A** 1~50000 **Other CT Type** 5~50000	5	Word	R/W
1009H	4105	CT2	Depending on meter CT type CT **Type 1A/5A** 5: 5A 1: 1A **CT Type mV** 333: 333mV 100: 100mV/50Hz; 120mV/60Hz	Depending on meter **CT Type** **CT Type 1A/5A** CT2 = 5 **CT Type mV** CT2 = 333 mV	Word	R/W

Distributed by MicroDAQ, LLC
(603) 746-5524
www.microdaq.com

System Status 03H Read, 10H Write						
Address(H)	Address(D)	Parameter	Range	Default	Data Type	Access Property
100AH	4106	kWh Pulse Constant	1~60000	5000	Word	R/W
100BH	4107	kvarh Pulse Constant	1~60000	5000	Word	R/W
100CH	4108	LCD Backlight Time	0~120	1	Word	R/W
100DH	4109	Demand Interval	1~30	15	Word	R/W
100EH	4110	Demand Method	0: Fixed Window 1: Sliding Window 2: Thermal 3: Rolling Window	1	Word	R/W
100FH	4111	Clear Demand	1: Clear Other: Not Clear	0	Word	R/W
1010H	4112	Clear Max/Min	1: Clear Other: Not Clear	0x55	Word	R/W
1011H	4113	Clear Run Hours	1: Clear Other: Not Clear	0	Word	R/W
1012H	4114	Current I1 Direction	0: Positive 1: Negative	0	Word	R/W
1013H	4115	Current I2 Direction	0: Positive 1: Negative	0	Word	R/W
1014H	4116	Current I3 Direction	0: Positive 1: Negative	0	Word	R/W
1015H	4117	VAR/PF Convention	0: IEC 1: IEEE	0	Word	R/W
1016H	4118	Clear Energy	1: Clear Other: Not Clear	0	Word	R/W
1017H	4119	Energy Calculation Method	0: Fundamental 1: Fundamental + Harmonics	1	Word	R/W
1018H	4120	Reactive Power Calculation Method	0: True Reactive Power 1: Generic Reactive Power	0	Word	R/W
1019H	4121	Energy Display Mode	0: Primary in Kwh 1: Secondary 2: Primary in 0.01kWh	0	Word	R/W
101AH	4122	Reset Ethernet Module	0: None 1: Reset 2: Restore Factory Default	0	Word	R/W

Distributed by MicroDAQ, LLC
(603) 746-5524
www.microdaq.com

System Status 03H Read, 10H Write						
Address(H)	Address(D)	Parameter	Range	Default	Data Type	Access Property
101BH	4123	Enable SOE	0: None 1: AXM-IO11 2: AXM-IO21 3: AXM-IO31 4: AXM-IO12 5: AXM-IO22 6: AXM-IO32	0	Word	R/W
101CH	4124	Clear Pulse Counter	0: None 1: AXM-IO11 2: AXM-IO21 3: AXM-IO31 4: AXM-IO12 5: AXM-IO22 6: AXM-IO32	0	Word	R/W
101DH	4125	Basic Parameter Mode	0: Secondary 1: Primary	0	Word	R/W
1020H	4128	Demand Calculation Slipping Time	1~30	1	Word	R/W

NOTE:

1. When the register 0FFEH is 0, the channel 1 communication protocol is configured as MODBUS. When the register 0FFEH is 1, the channel 1 communication protocol is set to BACnet.
2. Please note that the pulse period should be greater than the pulse width range specified for the I/O module DO configuration, which is between 20ms and 1000ms. The relationship between the configured pulse constant for 100AH and 100BH and the pulse period is represented by the equation: 1000x3600 / (U x I x n x oulse constant) = pulse period (unit:seconds). In this equation, 'n' is a user-defined parameter, having a value of 3 when three-phase signals are involved. The variables 'U' and 'I' correspond to the user-defined settings for PT2 (rated voltage) and CT2 (rated current), respectively.

6.3.4 System Status Parameters

The “System status” indicates the events that have occurred in the meter, what kinds of flags are read by the user, and the index of the storage events. Flags should be cleared after being read by the controller; otherwise, new data will not be stored properly.

Function code: 03H for reading, 10H for writing.

Data type: word

Distributed by MicroDAQ, LLC
(603) 746-5524
www.microdaq.com

Table 6-16 System Status Parameters

System Status 03H Read, 10H Write						
Address(H)	**Address(D)**	**Parameter**	**Range**	**Default**	**Data Type**	**Access Property**
101EH	4126	Non-standard Content Seal Option	0x55: Enable 0xAA: Disable	0	Word	R/W
101FH	4127	Seal Status	0x0A: Sealed Other: Unsealed	0	Word	R
1021H	4129	Clear Alarm Record	0x0A: Clear Other: Not Clear	0	Word	R/W
1022H	4130	CT41	Depending on meter CT type **CT Type 1A** 1~50000 **Other CT Type** 5~50000	5	Word	R/W
1023H	4131	CT42	Depending on meter CT type **CT Type 1A/5A** 5: 5A 1: 1A **CT Type mV** 333: 333mV 100: 100mV/50Hz; 120mV/60Hz	Depending on meter CT type **CT Type 1A/5A** CT2 = 5 **CT Type mV** CT2 = 333	Word	R/W
1024H	4132	Reserved		0		
1025H	4133	Reserved		0		
1026H	4134	Restore Factory Setting	0x01: Clear Other: Not Clear	0	Word	R/W
1027H	4135	Line N Current Method	0: Calculated 1: Measured	0	Uint16	R/W
1028H-102BH	4136-4139	Reserved			Word	R/W
102CH	4140	Nominal Full Load Power	1~14400	1200		
102DH	4141	Load Characteristics	0: Current 1: Power	0		
102EH	4142	System Status	Bit0: New alarm record Bit1: New SOE record	0	Word	R
102FH	4143	Channel 2 Baud Rate	2400~115200	38400	Word	R/W
1030H	4144	Channel 2 Parity	0: Even 1: Odd 2: None2 3: None1	3	Word	R/W
1031H	4145	Channel 2 Address	1~247	1	Word	R/W

System Status 03H Read, 10H Write						
Address(H)	**Address(D)**	**Parameter**	**Range**	**Default**	**Data Type**	**Access Property**
1032H	4146	Alarm Record Number	0: No Alarming Record 1~16: Latest Alarm Record Number	0	Word	R
1033H	4147	SOE Record Number	0: No SOE Record 1~20: Latest SOE Record Number	0	Word	R
1034H	4148	Run Time (High byte)	0~999999999		Word	R
1035H	4149	Run Time (Low byte)			Word	R
1036H	4150	Modules Connection Status	Bit0: AXM-IO11 Bit1: AXM-IO12 Bit2: AXM-IO21 Bit3: AXM-IO22 Bit4: AXM-IO31 Bit5: AXM-IO32 0: Disconnected 1: Connected		Word	R
1037H	4151	Reserved		0	Word	R
1038H	4152	Channel 2 Communication Protocol	0: Other 4: WEB2 (EATON version: ETHM) 5: PROFI	0	Word	R/W
1039H	4153	Enable Downloading Ten Year TOU	1: Enable	0	Word	R/W
103AH	4154	Clear Sharp Tariff	0x0A: Clear Other: Not Clear	0	Word	R/W
103BH	4155	Clear Peak Tariff	0x0A: Clear Other: Not Clear	0	Word	R/W
103CH	4156	Clear Valley Tariff	0x0A: Clear Other: Not Clear	0	Word	R/W
103DH	4157	Clear Normal Tariff	0x0A: Clear Other: Not Clear	0	Word	R/W
103EH	4158	Clear Total	0x0A: Clear Other: Not Clear	0	Word	R/W

NOTE:

1. Please refer to Chapter 3 and Chapter 4 for more details about parameter settings.
2. When register 1038H is 0, channel 2 communication protocol is set to other protocols, while channel 2 communication should select RS-485 module or Ethernet module. If the selected protocol doesn't match the attached module, communication cannot process. If you use an Ethernet or PROFIBUS module, you should set 38400bps and NON1 for the channel 2 communication. When Ethernet or PROFIBUS module establishes a connection successfully, the protocol, baud rate, or parity settings cannot be changed.

6.3.5 Date and Time Registers

Distributed by MicroDAQ, LLC
(603) 746-5524
www.microdaq.com

Function code: 03H for reading, 10H for pre-setting.

Table 6-17 Data and Time Registers

Clock Settings: 03H Read, 10H Write					
Address(H)	**Address(D)**	**Parameter**	**Range**	**Data Type**	**Access Property**
103FH	4159	Week	0~6	Word	R/W
1040H	4160	Year	2000~2099	Word	R/W
1041H	4161	Month	1~12	Word	R/W
1042H	4162	Day	1~31	Word	R/W
1043H	4163	Hour	0-23	Word	R/W
1044H	4164	Minute	0-59	Word	R/W
1045H	4165	Second	0-59	Word	R/W

6.3.6 100ms Real-Time Metering Parameters

The 100ms Real-Time Metering Parameters and their corresponding register addresses are shown in the following table. (Rx is the numerical value within the register of the Acuvim-L series meter).

Table 6-18 100ms Real-Time Metering Parameters

Basic Measurements: 03H Read								
Address(H)	**Address(D)**	**Symbol**	**Parameter**	**Parameter Mode**		**Property**	**Data Type**	**Access Property**
				Primary Mode	**Secondary Mode**			
3000H-3001H	12288-12289	F	Frequency	F=Rx	F=Rx	Hz	Float	R
3002H-3003H	12290-12291	U1	Phase 1 Voltage	U=Rx	U=Rx*(PT1/PT2)	V	Float	R
3004H-3005H	12292-12293	U2	Phase 2 Voltage	U=Rx	U=Rx*(PT1/PT2)	V	Float	R
3006H-3007H	12294-12295	U3	Phase 3 Voltage	U=Rx	U=Rx*(PT1/PT2)	V	Float	R
3008H-3009H	12296-12297	Uavg	Average Phase Voltage	U=Rx	U=Rx*(PT1/PT2)	V	Float	R
300AH-300BH	12298-12299	U12	Line Voltage 1-2	U=Rx	U=Rx*(PT1/PT2)	V	Float	R
300CH-300DH	12300-12301	U23	Line Voltage 2-3	U=Rx	U=Rx*(PT1/PT2)	V	Float	R
300EH-300FH	12302-12303	U31	Line Voltage 3-1	U=Rx	U=Rx*(PT1/PT2)	V	Float	R
3010H-3011H	12304-12305	Ulavg	Average Line Voltage	U=Rx	U=Rx*(PT1/PT2)	V	Float	R
3012H-3013H	12306-12307	IL1	Total Phase A Current	I=Rx	I=Rx*(CT1/CT2)	A	Float	R
3014H-3015H	12308-12309	IL2	Total Phase B Current	I=Rx	I=Rx*(CT1/CT2)	A	Float	R
3016H-3017H	12310-12311	IL3	Total Phase C Current	I=Rx	I=Rx*(CT1/CT2)	A	Float	R
3018H-3019H	12312-12313	Iavg	Average Phase Current	I=Rx	I=Rx*(CT1/CT2)	A	Float	R
301AH-301BH	12314-12315	In	Neutral Current	I=Rx	I=Rx*(CT1/CT2)	A	Float	R
301CH-301DH	12316-12317	Pa	Phase A Power	P=Rx/1000	P=[Rx*(PT1/PT2)*(CT1/CT2)]/1000	kW	Float	R
301EH-301FH	12318-12319	Pb	Phase B Power	P=Rx/1000	P=[Rx*(PT1/PT2)*(CT1/CT2)]/1000	kW	Float	R
3020H-3021H	12320-12321	Pc	Phase C Power	P=Rx/1000	P=[Rx*(PT1/PT2)*(CT1/CT2)]/1000	kW	Float	R
3022H-3023H	12322-12323	Psum	Total System Power	P=Rx/1000	P=[Rx*(PT1/PT2)*(CT1/CT2)]/1000	kW	Float	R
3024H-3025H	12324-12325	Qa	Phase A Reactive Power	Q=Rx/1000	Q=[Rx*(PT1/PT2)*(CT1/CT2)]/1000	kvar	Float	R

Basic Measurements: 03H Read								
Address(H)	Address(D)	Symbol	Parameter	Parameter Mode		Property	Data Type	Access Property
				Primary Mode	Secondary Mode			
3026H-3027H	12326-12327	Qb	Phase B Reactive Power	Q=Rx/1000	Q=[Rx*(PT1/PT2)*(CT1/CT2)]/1000	kvar	Float	R
3028H-3029H	12328-12329	Qc	Phase C Reactive Power	Q=Rx/1000	Q=[Rx*(PT1/PT2)*(CT1/CT2)]/1000	kvar	Float	R
302AH-302BH	12330-12331	Qsum	Total Reactive Power	Q=Rx/1000	Q=[Rx*(PT1/PT2)*(CT1/CT2)]/1000	kvar	Float	R
302CH-302DH	12332-12333	Sa	Phase A Apparent Power	S=Rx/1000	S=[Rx*(PT1/PT2)*(CT1/CT2)]/1000	kVA	Float	R
302EH-302FH	12334-12335	Sb	Phase B Apparent Power	S=Rx/1000	S=[Rx*(PT1/PT2)*(CT1/CT2)]/1000	kVA	Float	R
3030H-3031H	12336-12337	Sc	Phase C Apparent Power	S=Rx/1000	S=[Rx*(PT1/PT2)*(CT1/CT2)]/1000	kVA	Float	R
3032H-3033H	12338-12339	Ssum	Total Apparent Power	S=Rx/1000	S=[Rx*(PT1/PT2)*(CT1/CT2)]/1000	kVA	Float	R
3034H-3035H	12340-12341	PFa	Phase A Power Factor	PF=Rx	PF=Rx		Float	R
3036H-3037H	12342-12343	PFb	Phase B Power Factor	PF=Rx	PF=Rx		Float	R
3038H-3039H	12344-12345	PFc	Phase C Power Factor	PF=Rx	PF=Rx		Float	R
3403AH-303BH	12346-12347	PFsum	Total Power Factor	PF=Rx	PF=Rx		Float	R

6.3.7 Real-Time Metering Parameters

There are two different modes available for reading basic analog measurements: primary mode and secondary mode. In primary mode, the numerical value within the meter's register corresponds directly to the actual physical value. In secondary mode, the relationship between the numerical value in the register and the actual physical value is shown in the following table. (Rx is the numerical value within the register of the Acuvim-L series meter).

NOTE: The parameter mode Primary or Secondary corresponds to the Basic Parameter Mode (at address 101DH) in the system parameter settings. You can also configure the parameter mode from the 'S31 PARA MODE' in the system settings through the meter's display. The basic parameter mode of the meter is Secondary mode by default.

Table 6-19 Real-Time Metering Parameters

Energy Measurements: 03H Read, 10H Write								
Address(H)	Address(D)	Symbol	Parameter	Parameter Mode		Proper-ty	Data Type	Access Prop-erty
				Primary Mode	Secondary Mode			
4000H-4001H	16384-16385	F	Frequency	F=Rx	F=Rx	Hz	Float	R
4002H-4003H	16386-16387	U1	Phase 1 Voltage	U=Rx	U=Rx*(PT1/PT2)	V	Float	R
4004H-4005H	16388-16389	U2	Phase 2 Voltage	U=Rx	U=Rx*(PT1/PT2)	V	Float	R
4006H-4007H	16390-16391	U3	Phase 3 Voltage	U=Rx	U=Rx*(PT1/PT2)	V	Float	R
4008H-4009H	16392-16393	Uavg	Average Phase Voltage	U=Rx	U=Rx*(PT1/PT2)	V	Float	R
400AH-400BH	16394-16395	U12	Line Voltage 1-2	U=Rx	U=Rx*(PT1/PT2)	V	Float	R
400CH-400DH	16396-16397	U23	Line Voltage 2-3	U=Rx	U=Rx*(PT1/PT2)	V	Float	R
400EH-400FH	16398-16399	U31	Line Voltage 3-1	U=Rx	U=Rx*(PT1/PT2)	V	Float	R
4010H-4011H	16400-16401	Ulavg	Average Line Voltage	U=Rx	U=Rx*(PT1/PT2)	V	Float	R

Distributed by MicroDAQ, LLC
(603) 746-5524
www.microdaq.com

Energy Measurements: 03H Read, 10H Write								
Address(H)	Address(D)	Symbol	Parameter	Parameter Mode		Proper-ty	Data Type	Access Prop-erty
				Primary Mode	Secondary Mode			
4012H-4013H	16402-16403	IL1	Total Phase A Current	I=Rx	I=Rx*(CT1/CT2)	A	Float	R
4014H-4015H	16404-16405	IL2	Total Phase B Current	I=Rx	I=Rx*(CT1/CT2)	A	Float	R
4016H-4017H	16406-16407	IL3	Total Phase C Current	I=Rx	I=Rx*(CT1/CT2)	A	Float	R
4018H-4019H	16408-16409	Iavg	Average Phase Current	I=Rx	I=Rx*(CT1/CT2)	A	Float	R
401AH-401BH	16410-16411	In	Neutral Current	I=Rx	I=Rx*(CT1/CT2)	A	Float	R
401CH-401DH	16412-16413	Pa	Phase A Power	P=Rx/1000	P=[Rx*(PT1/PT2)*(CT1/CT2)]/1000	kW	Float	R
401EH-401FH	16414-16415	Pb	Phase B Power	P=Rx/1000	P=[Rx*(PT1/PT2)*(CT1/CT2)]/1000	kW	Float	R
4020H-4021H	16416-16417	Pc	Phase C Power	P=Rx/1000	P=[Rx*(PT1/PT2)*(CT1/CT2)]/1000	kW	Float	R
4022H-4023H	16418-16419	Psum	Total System Power	P=Rx/1000	P=[Rx*(PT1/PT2)*(CT1/CT2)]/1000	kW	Float	R
4024H-4025H	16420-16421	Qa	Phase A Reactive Power	Q=Rx/1000	Q=[Rx*(PT1/PT2)*(CT1/CT2)]/1000	kvar	Float	R
4026H-4027H	16422-16423	Qb	Phase B Reactive Power	Q=Rx/1000	Q=[Rx*(PT1/PT2)*(CT1/CT2)]/1000	kvar	Float	R
4028H-4029H	16424-16425	Qc	Phase C Reactive Power	Q=Rx/1000	Q=[Rx*(PT1/PT2)*(CT1/CT2)]/1000	kvar	Float	R
402AH-402BH	16426-16427	Qsum	Total Reactive Power	Q=Rx/1000	Q=[Rx*(PT1/PT2)*(CT1/CT2)]/1000	kvar	Float	R
402CH-402DH	16428-16429	Sa	Phase A Apparent Power	S=Rx/1000	S=[Rx*(PT1/PT2)*(CT1/CT2)]/1000	kVA	Float	R
402EH-402FH	16430-16431	Sb	Phase B Apparent Power	S=Rx/1000	S=[Rx*(PT1/PT2)*(CT1/CT2)]/1000	kVA	Float	R
4030H-4031H	16432-16433	Sc	Phase C Apparent Power	S=Rx/1000	S=[Rx*(PT1/PT2)*(CT1/CT2)]/1000	kVA	Float	R
4032H-4033H	16434-16435	Ssum	Total Apparent Power	S=Rx/1000	S=[Rx*(PT1/PT2)*(CT1/CT2)]/1000	kVA	Float	R
4034H-4035H	16436-16437	PFa	Phase A Power Factor	PF=Rx	PF=Rx		Float	R
4036H-4037H	16438-16439	PFb	Phase B Power Factor	PF=Rx	PF=Rx		Float	R
4038H-4039H	16440-16441	PFc	Phase C Power Factor	PF=Rx	PF=Rx		Float	R
403AH-403BH	16442-16443	PFsum	Total Power Factor	PF=Rx	PF=Rx		Float	R
403CH-403DH	16444-16445	U_unbl	Voltage Unbalance	U=Rx*100%	U=Rx*100%	%	Float	R
403EH-403FH	16446-16447	I_unbl	Current Unbalance	I=Rx*100%	I=Rx*100%	%	Float	R
4040H-4041H	16448-16449	L/C/R	Load Characteristic	76.0(L) 67.0(C) 82.0(R)	76.0(L) 67.0(C) 82.0(R)		Float	R
4042H-4043H	16450-16451	P_Dmd	Power Demand	P=Rx/1000	P=[Rx*(PT1/PT2)*(CT1/CT2)]/1000	kW	Float	R
4044H-4045H	16452-16453	Q_Dmd	Reactive Power Demand	S=Rx/1000	S=[Rx*(PT1/PT2)*(CT1/CT2)]/1000	kVA	Float	R
4046H-4047H	16454-16455	S_Dmd	Apparent Power Demand	Q=Rx/1000	Q=[Rx*(PT1/PT2)*(CT1/CT2)]/1000	kvar	Float	R
4600H-4601H	17920-17921	I1_Dmd	Phase A Current Demand	I=Rx	I=Rx*(CT1/CT2)	A	Float	R
4602H-4603H	17922-17923	I2_Dmd	Phase B Current Demand	I=Rx	I=Rx*(CT1/CT2)	A	Float	R
4604H-4605H	17924-17925	I3_Dmd	Phase C Current Demand	I=Rx	I=Rx*(CT1/CT2)	A	Float	R
2180H-2181H	8576-8577	Freq	Frequency	F=Rx	F=Rx	Hz	Float	R
2182H-2183H	8578-8579	Va	Phase 1 Voltage	U=Rx	U=Rx*(PT1/PT2)	V	Float	R
2184H-2185H	8580-8581	Vb	Phase 2 Voltage	U=Rx	U=Rx*(PT1/PT2)	V	Float	R
2186H-2187H	8582-8583	Vc	Phase 3 Voltage	U=Rx	U=Rx*(PT1/PT2)	V	Float	R
2188H-2189H	8584-8585	Vlnagv	Average Phase Voltage	U=Rx	U=Rx*(PT1/PT2)	V	Float	R
218AH-218BH	8586-8587	Vab	Line Voltage 1-2	U=Rx	U=Rx*(PT1/PT2)	V	Float	R
218CH-218DH	8588-8589	Vbc	Line Voltage 2-3	U=Rx	U=Rx*(PT1/PT2)	V	Float	R
218EH-218FH	8590-8591	Vca	Line Voltage 3-1	U=Rx	U=Rx*(PT1/PT2)	V	Float	R
2190H-2191H	8592-8593	Vllavg	Average Line Voltage	U=Rx	U=Rx*(PT1/PT2)	V	Float	R
2192H-2193H	8594-8595	Ia	Total Phase A Current	I=Rx	I=Rx*(CT1/CT2)	A	Float	R
2194H-2195H	8596-8597	Ib	Total Phase B Current	I=Rx	I=Rx*(CT1/CT2)	A	Float	R

Energy Measurements: 03H Read, 10H Write								
Address(H)	Address(D)	Symbol	Parameter	Parameter Mode		Property	Data Type	Access Property
				Primary Mode	Secondary Mode			
2196H-2197H	8598-8599	Ic	Total Phase C Current	I=Rx	I=Rx*(CT1/CT2)	A	Float	R
2198H-2199H	8600-8601	In_calc	Neutral Current Calculated	I=Rx	I=Rx*(CT1/CT2)	A	Float	R
219AH-219BH	8602-8603	In_ measure	Neutral Current Measured	I=Rx	I=Rx*(CT1/CT2)	A	Float	R
219CH-219DH	8604-8605	Itotal	Total Current	I=Rx	I=Rx*(CT1/CT2)	A	Float	R
219EH-219FH	8606-8607	Iavg	Average Current	I=Rx	I=Rx*(CT1/CT2)	A	Float	R
21A0H-21A1H	8608-8609	Pa	Phase A Power	P=Rx/1000	P=[Rx*(PT1/PT2)*(CT1/CT2)]/1000	kW	Float	R
21A2H-21A3H	8610-8611	Pb	Phase B Power	P=Rx/1000	P=[Rx*(PT1/PT2)*(CT1/CT2)]/1000	kW	Float	R
21A4H-21A5H	8612-8613	Pc	Phase C Power	P=Rx/1000	P=[Rx*(PT1/PT2)*(CT1/CT2)]/1000	kW	Float	R
21A6H-21A7H	8614-8615	Psum	Total System Power	P=Rx/1000	P=[Rx*(PT1/PT2)*(CT1/CT2)]/1000	kW	Float	R
21A8H-21A9H	8616-8617	Qa	Phase A Reactive Power	Q=Rx/1000	Q=[Rx*(PT1/PT2)*(CT1/CT2)]/1000	kvar	Float	R
21AAH-21ABH	8618-8619	Qb	Phase B Reactive Power	Q=Rx/1000	Q=[Rx*(PT1/PT2)*(CT1/CT2)]/1000	kvar	Float	R
21ACH-21ADH	8620-8621	Qc	Phase C Reactive Power	Q=Rx/1000	Q=[Rx*(PT1/PT2)*(CT1/CT2)]/1000	kvar	Float	R
21AEH-21AFH	8622-8623	Qsum	Total Reactive Power	Q=Rx/1000	Q=[Rx*(PT1/PT2)*(CT1/CT2)]/1000	kvar	Float	R
21B0H-21B1H	8624-8625	Sa	Phase A Apparent Power	S=Rx/1000	S=[Rx*(PT1/PT2)*(CT1/CT2)]/1000	kVA	Float	R
21B2H-21B3H	8626-8627	Sb	Phase B Apparent Power	S=Rx/1000	S=[Rx*(PT1/PT2)*(CT1/CT2)]/1000	kVA	Float	R
21B4H-21B5H	8628-8629	Sc	Phase C Apparent Power	S=Rx/1000	S=[Rx*(PT1/PT2)*(CT1/CT2)]/1000	kVA	Float	R
21B6H-21B7H	8630-8631	Ssum	Total Apparent Power	S=Rx/1000	S=[Rx*(PT1/PT2)*(CT1/CT2)]/1000	kVA	Float	R
21B8H-21B9H	8632-8633	PFa	Phase A Power Factor	PF=Rx	PF=Rx		Float	R
21BAH-21BBH	8634-8635	PFb	Phase B Power Factor	PF=Rx	PF=Rx		Float	R
21BCH-21BDH	8636-8637	PFc	Phase C Power Factor	PF=Rx	PF=Rx		Float	R
21BEH-21BFH	8638-8639	PFsum	Total Power Factor	PF=Rx	PF=Rx		Float	R
21C0H-21C1H	8640-8641	U_unbl	Voltage Unbalance	U=Rx*100%	U=Rx*100%	%	Float	R
21C2H-21C3H	8642-8643	I_unbl	Current Unbalance	I=Rx*100%	I=Rx*100%	%	Float	R
21C4H-21C5H	8644-8645	L/C/R	Load Characteristic	76.0(L) 67.0(C) 82.0(R)	76.0(L) 67.0(C) 82.0(R)		Float	R
21C6H-21C7H	8646-8647	P_Dmd	Power Demand	P=Rx/1000	P=[Rx*(PT1/PT2)*(CT1/CT2)]/1000	kW	Float	R
21C8H-21C9H	8648-8649	Q_Dmd	Reactive Power Demand	S=Rx/1000	S=[Rx*(PT1/PT2)*(CT1/CT2)]/1000	kVA	Float	R
21CAH-21CBH	8650-8651	S_Dmd	Apparent Power Demand	Q=Rx/1000	Q=[Rx*(PT1/PT2)*(CT1/CT2)]/1000	kvar	Float	R
21CCH-21CDH	8652-8653	I1_Dmd	Phase A Current Demand	I=Rx	I=Rx*(CT1/CT2)	A	Float	R
21CEH-21CFH	8654-8655	I2_Dmd	Phase B Current Demand	I=Rx	I=Rx*(CT1/CT2)	A	Float	R
21D0H-21D1H	8656-8657	I3_Dmd	Phase C Current Demand	I=Rx	I=Rx*(CT1/CT2)	A	Float	R
21D2H-21D3H	8658-8659	In_Dmd	Neutral Current Demand	I=Rx	I=Rx*(CT1/CT2)	A	Float	R

6.3.8 Energy Parameters

NOTE: The Energy Display option of either Primary Mode or Secondary Mode corresponds to the Energy Display Mode (at address 1019H) located in the system parameter settings. You can also configure the energy display mode from the 'S274 E SEL' in the system settings through the meter's display. The energy display mode is in Primary Mode by default.

Distributed by MicroDAQ, LLC
(603) 746-5524
www.microdaq.com

Table 6-20 Energy Parameters

Energy Measurements: 03H Read, 10H Write								
Address(H)	Address(D)	Symbol	Parameter	Parameter Mode		Range	Property	Access Property
				Primary Mode	Secondary Mode			
4048H-4049H	16456-16457	Ep_Imp	Import Active Energy	Ep_Imp=Rx/10	Ep_Imp=Rx/1000	0~999999999	kWh	R/W
404AH-404BH	16458-16459	Ep_Exp	Export Active Energy	Ep_Exp=Rx/10	Ep_Exp=Rx/1000	0~999999999	kWh	R/W
404CH-404DH	16460-16461	Eq_Imp	Import Reactice Energy	Eq_Imp=Rx/10	Eq_Imp=Rx/1000	0~999999999	kvarh	R/W
404EH-404FH	16462-16463	Eq_Exp	Export Reactive Energy	Eq_Exp=Rx/10	Eq_Exp=Rx/1000	0~999999999	kvarh	R/W
4050H-4051H	16464-16465	Ep_sum	Total Active Energy	Ep_sum=Rx/10	Ep_sum=Rx/1000	0~999999999	kWh	R/W
4052H-4053H	16466-16467	Ep_net	Net Active Energy	Ep_net=Rx/10	Ep_net=Rx/1000	-999999999 ~9999999	kWh	R/W
4054H-4055H	16468-16469	Eq_sum	Total Reactive Energy	Eq_sum=Rx/10	Eq_sum=Rx/1000	0~999999999	kvarh	R/W
4056H-4057H	16470-16471	Eq_net	Net Reactive Energy	Eq_net=Rx/10	Eq_net=Rx/1000	-999999999 ~9999999	kvarh	R/W
4058H-4059H	16472-16473	Es	Apparent Energy	Es=Rx/10	Es=Rx/1000	0~999999999	kVAh	R/W
4620H-4621H	17952-17953	Epa_Imp	Phase A Import Active Energy	Epa_Imp=Rx/10	Epa_ Imp=Rx/1000	0~999999999	kWh	R/W
4622H-4623H	17954-17955	Epa_Exp	Phase A Export Active Energy	Epa_Exp=Rx/10	Epa_Exp=Rx/1000	0~999999999	kWh	R/W
4624H-4625H	17956-17957	Epb_Imp	Phase B Import Active Energy	Epb_Imp=Rx/10	Epb_ Imp=Rx/1000	0~999999999	kWh	R/W
4626H-4627H	17958-17959	Epb_Exp	Phase B Export Active Energy	Epb_Exp=Rx/10	Epb_ Exp=Rx/1000	0~999999999	kWh	R/W
4628H-4629H	17960-17961	Epc_Imp	Phase C Import Active Energy	Epc_Imp=Rx/10	Epc_Imp=Rx/1000	0~999999999	kWh	R/W
462AH-462BH	17962-17963	Epc_Exp	Phase C Export Active Energy	Epc_Exp=Rx/10	Epc_Exp=Rx/1000	0~999999999	kWh	R/W
462CH-462DH	17964-17965	Eqa_Imp	Phase A Import Reactive Energy	Eqa_Imp=Rx/10	Eqa_ Imp=Rx/1000	0~999999999	kvarh	R/W
462EH-462FH	17966-17967	Eqa_Exp	Phase A Export Reactive Energy	Eqa_Exp=Rx/10	Eqa_Exp=Rx/1000	0~999999999	kvarh	R/W
4630H-4631H	17968-17969	Eqb_Imp	Phase B Import Reactive Energy	Eqb_Imp=Rx/10	Eqb_ Imp=Rx/1000	0~999999999	kvarh	R/W
4632H-4633H	17970-17971	Eqb_Exp	Phase B Export Reactive Energy	Eqb_Exp=Rx/10	Eqb_ Exp=Rx/1000	0~999999999	kvarh	R/W
4634H-4635H	17972-17973	Eqc_Imp	Phase C Import Reactive Energy	Eqc_Imp=Rx/10	Eqc_Imp=Rx/1000	0~999999999	kvarh	R/W
4636H-4637H	17974-17975	Eqc_Exp	Phase C Export Reactive Energy	Eqc_Exp=Rx/10	Eqc_Exp=Rx/1000	0~999999999	kvarh	R/W
4638H-4639H	17976-17977	Esa	Phase A Apparent Energy	Esa=Rx/10	Esa=Rx/1000	0~999999999	kVA	R/W
463AH-463BH	17978-17979	Esb	Phase B Apparent Energy	Esb=Rx/10	Esb=Rx/1000	0~999999999	kVA	R/W
463CH-463DH	17980-17981	Esc	Phase C Apparent Energy	Esc=Rx/10	Esc=Rx/1000	0~999999999	kVA	R/W
2080H-2081H	8320-8321	Ep_imp	Import Active Energy	Ep_imp=Rx/10	Ep_imp=Rx/1000	0~999999999	kWh	R/W
2082H-2083H	8322-8323	Ep_exp	Export Active Energy	Ep_exp=Rx/10	Ep_exp=Rx/1000	0~999999999	kWh	R/W
2084H-2085H	8324-8325	Ep_total	Total Active Energy	Ep_total=Rx/10	Ep_total=Rx/1000	0~999999999	kWh	R/W
2086H-2087H	8326-8327	Ep_net	Net Active Energy	Ep_net=Rx/10	Ep_net=Rx/1000	-999999999 ~999999999	kWh	R/W
2088H-2089H	8328-8329	Ep_q1	Active Energy Q1	Ep_q1=Rx/10	Ep_q1=Rx/1000	0~999999999	kWh	R/W
208AH-208BH	8330-8331	Ep_q2	Active Energy Q2	Ep_q2=Rx/10	Ep_q2=Rx/1000	0~999999999	kWh	R/W
208CH-208DH	8332-8333	Ep_q3	Active Energy Q3	Ep_q3=Rx/10	Ep_q3=Rx/1000	0~999999999	kWh	R/W
208EH-208FH	8334-8335	Ep_q4	Active Energy Q4	Ep_q4=Rx/10	Ep_q4=Rx/1000	0~999999999	kWh	R/W
2090H-2091H	8336-8337	Eq_imp	Import Reactive Energy	Eq_imp=Rx/10	Eq_imp=Rx/1000	0~999999999	kvarh	R/W
2092H-2093H	8338-8339	Eq_exp	Export Reactive Energy	Eq_exp=Rx/10	Eq_exp=Rx/1000	0~999999999	kvarh	R/W
2094H-2095H	8340-8341	Eq_total	Total Reactive Energy	Eq_total=Rx/10	Eq_total=Rx/1000	0~999999999	kvarh	R/W
2096H-2097H	8342-8343	Eq_net	Net Reactive Energy	Eq_net=Rx/10	Eq_net=Rx/1000	-999999999 ~999999999	kvarh	R/W

Energy Measurements: 03H Read, 10H Write								
Address(H)	Address(D)	Symbol	Parameter	Parameter Mode		Range	Prop-erty	Access Prop-erty
				Primary Mode	Secondary Mode			
2098H-2099H	8344-8345	Eq_q1	Reactive Energy Q1	Eq_q1=Rx/10	Eq_q1=Rx/1000	0~999999999	kvarh	R/W
209AH-209BH	8346-8347	Eq_q2	Reactive Energy Q2	Eq_q2=Rx/10	Eq_q2=Rx/1000	0~999999999	kvarh	R/W
209CH-209DH	8348-8349	Eq_q3	Reactive Energy Q3	Eq_q3=Rx/10	Eq_q3=Rx/1000	0~999999999	kvarh	R/W
209EH-209FH	8350-8351	Eq_q4	Reactive Energy Q4	Eq_q4=Rx/10	Eq_q4=Rx/1000	0~999999999	kvarh	R/W
20A0H-20A1H	8352-8353	Es_imp	Import Apparent Energy	Es_imp=Rx/10	Es_imp=Rx/1000	0~999999999	kVA	R/W
20A2H-20A3H	8354-8355	Es_exp	Export Apparent Energy	Es_exp=Rx/10	Es_exp=Rx/1000	0~999999999	kVA	R/W
20A4H-20A5H	8356-8357	Es_total	Total Apparent Energy	Es_total=Rx/10	Es_total=Rx/1000	0~999999999	kVA	R/W
20A6H-20A7H	8358-8359	Es_net	Net Apparent Energy	Es_net=Rx/10	Es_net=Rx/1000	0~999999999	kVA	R/W
20A8H-20A9H	8360-8361	Es_q1	Apparent Energy Q1	Es_q1=Rx/10	Es_q1=Rx/1000	0~999999999	kVA	R/W
20AAH-20ABH	8362-8363	Es_q2	Apparent Energy Q2	Es_q2=Rx/10	Es_q2=Rx/1000	0~999999999	kVA	R/W
20ACH-20ADH	8364-8365	Es_q3	Apparent Energy Q3	Es_q3=Rx/10	Es_q3=Rx/1000	0~999999999	kVA	R/W
20AEH-20AFH	8366-8367	Es_q4	Apparent Energy Q4	Es_q4=Rx/10	Es_q4=Rx/1000	0~999999999	kVA	R/W
20B0H-20B1H	8368-8369	Epa_imp	Phase A Import Active Energy	Epa_imp=Rx/10	Epa_ imp=Rx/1000	0~999999999	kWh	R/W
20B2H-20B3H	8370-8371	Epa_exp	Phase A Export Active Energy	Epa_exp=Rx/10	Epa_exp=Rx/1000	0~999999999	kWh	R/W
20B4H-20B5H	8372-8373	Epb_imp	Phase B Import Active Energy	Epb_imp=Rx/10	Epb_ imp=Rx/1000	0~999999999	kWh	R/W
20B6H-20B7H	8374-8375	Epb_exp	Phase B Export Active Energy	Epb_exp=Rx/10	Epb_ exp=Rx/1000	0~999999999	kWh	R/W
20B8H-20B9H	8376-8377	Epc_imp	Phase C Import Active Energy	Epc_imp=Rx/10	Epc_imp=Rx/1000	0~999999999	kWh	R/W
20BAH-20BBH	8378-8379	Epc_exp	Phase C Export Active Energy	Epc_exp=Rx/10	Epc_exp=Rx/1000	0~999999999	kWh	R/W
20BCH-20BDH	8380-8381	Eqa_imp	Phase A Import Reactive Energy	Eqa_imp=Rx/10	Eqa_ imp=Rx/1000	0~999999999	kvarh	R/W
20BEH-20BFH	8382-8383	Eqa_exp	Phase A Export Reactive Energy	Eqa_exp=Rx/10	Eqa_exp=Rx/1000	0~999999999	kvarh	R/W
20C0H-20C1H	8384-8385	Eqb_imp	Phase B Import Reactive Energy	Eqb_imp=Rx/10	Eqb_ imp=Rx/1000	0~999999999	kvarh	R/W
20C2H-20C3H	8386-8387	Eqb_exp	Phase B Export Reactive Energy	Eqb_exp=Rx/10	Eqb_ exp=Rx/1000	0~999999999	kvarh	R/W
20C4H-20C5H	8388-8389	Eqc_imp	Phase C Import Reactive Energy	Eqc_imp=Rx/10	Eqc_imp=Rx/1000	0~999999999	kvarh	R/W
20C6H-20C7H	8390-8391	Eqc_exp	Phase C Export Reactive Energy	Eqc_exp=Rx/10	Eqc_exp=Rx/1000	0~999999999	kvarh	R/W
20C8H-20C9H	8392-8393	Esa_imp	Phase A Import Apparent Energy	Esa_imp=Rx/10	Esa_imp=Rx/1000	0~999999999	kVA	R/W
20CAH-20CBH	8394-8395	Esa_exp	Phase A Export Apparent Energy	Esa_exp=Rx/10	Esa_exp=Rx/1000	0~999999999	kVA	R/W
20CCH-20CDH	8396-8397	Esb_imp	Phase B Import Apparent Energy	Esb_imp=Rx/10	Esb_imp=Rx/1000	0~999999999	kVA	R/W
20CEH-20CFH	8398-8399	Esb_exp	Phase B Export Apparent Energy	Esb_exp=Rx/10	Esb_exp=Rx/1000	0~999999999	kVA	R/W
20D0H-20D1H	8400-8401	Esc_imp	Phase C Import Apparent Energy	Esc_imp=Rx/10	Esc_imp=Rx/1000	0~999999999	kVA	R/W
20D2H-20D3H	8402-8403	Esc_exp	Phase C Export Apparent Energy	Esc_exp=Rx/10	Esc_exp=Rx/1000	0~999999999	kVA	R/W

6.3.9 TOU (Time of Use) Registers

Current Month Accumulation TOU Energy

Table 6-21 Current Month Accumulation TOU Energy Parameters

Current Month Accumulation TOU Energy: 03H Read, 10H Write							
Address(H)	Address(D)	Symbol	Parameter	Range	Property	Data Type	Access Property
Sharp							
7200H-7201H	29184-29185	Ep_Imp	Import Active Energy	0-999999999	kWh	Dword	R/W
7202H-7203H	29186-29187	Ep_Exp	Export Active Energy	0-999999999	kWh	Dword	R/W

Distributed by MicroDAQ, LLC
(603) 746-5524
www.microdaq.com

Current Month Accumulation TOU Energy: 03H Read, 10H Write							
Address(H)	**Address(D)**	**Symbol**	**Parameter**	**Range**	**Property**	**Data Type**	**Access Property**
7204H-7205H	29188-29189	Eq_Imp	Import Reactive Energy	0-999999999	kvarh	Dword	R/W
7206H-7207H	29190-29191	Eq_Exp	Export Reactive Energy	0-999999999	kvarh	Dword	R/W
7208H-7209H	29192-29193	Es	Apparent Energy	0-999999999	kVAh	Dword	R/W
Peak							
720AH-720BH	29194-29195	Ep_Imp	Import Active Energy	0-999999999	kWh	Dword	R/W
720CH-720DH	29196-29197	Ep_Exp	Export Active Energy	0-999999999	kWh	Dword	R/W
720EH-720FH	29198-29199	Eq_Imp	Import Reactive Energy	0-999999999	kvarh	Dword	R/W
7210H-7211H	29200-29201	Eq_Exp	Export Reactive Energy	0-999999999	kvarh	Dword	R/W
7212H-7213H	29202-29203	Es	Apparent Energy	0-999999999	kVAh	Dword	R/W
Valley							
7214H-7215H	29204-29205	Ep_Imp	Import Active Energy	0-999999999	kWh	Dword	R/W
7216H-7217H	29206-29207	Ep_Exp	Export Active Energy	0-999999999	KWh	Dword	R/W
7218H-7219H	29208-29209	Eq_Imp	Import Reactive Energy	0-999999999	kvarh	Dword	R/W
721AH-721BH	29210-29211	Eq_Exp	Export Reactive Energy	0-999999999	kvarh	Dword	R/W
721CH-721DH	29212-29213	Es	Apparent Energy	0-999999999	kVAh	Dword	R/W
Normal							
721EH-721FH	29214-29215	Ep_Imp	Import Active Energy	0-999999999	kWh	Dword	R/W
7220H-7221H	29216-29217	Ep_Exp	Export Active Energy	0-999999999	kWh	Dword	R/W
7222H-7223H	29218-29219	Eq_Imp	Import Reactive Energy	0-999999999	kvarh	Dword	R/W
7224H-7225H	29220-29221	Eq_Exp	Export Reactive Energy	0-999999999	kvarh	Dword	R/W
7226H-7227H	29222-29223	Es	Apparent Energy	0-999999999	kVAh	Dword	R/W
Total							
7228H-7229H	29224-29225	Ep_Imp	Import Active Energy	0-999999999	kWh	Dword	R/W
722AH-722BH	29226-29227	Ep_Exp	Export Active Energy	0-999999999	kWh	Dword	R/W
722CH-722DH	29228-29229	Eq_Imp	Import Reactive Energy	0-999999999	kvarh	Dword	R/W
722EH-722FH	29230-29231	Eq_Exp	Export Reactive Energy	0-999999999	kvarh	Dword	R/W
7230H-7231H	29232-29233	Es	Apparent Energy	0-999999999	kVAh	Dword	R/W

Prior Month Accumulation TOU Energy

Table 6-22 Prior Month Accumulation TOU Energy Parameters

Prior Month Accumulation TOU Energy: 03H Read, 10H Write							
Address(H)	**Address(D)**	**Symbol**	**Parameter**	**Range**	**Property**	**Data Type**	**Access Property**
Sharp							
7232H-7233H	29234-29235	Ep_Imp	Import Active Energy	0-999999999	kWh	Dword	R/W
7234H-7235H	29236-29237	Ep_Exp	Export Active Energy	0-999999999	kWh	Dword	R/W
7236H-7237H	29238-29239	Eq_Imp	Import Reactive Energy	0-999999999	kvarh	Dword	R/W
7238H-7239H	29240-29241	Eq_Exp	Export Reactive Energy	0-999999999	kvarh	Dword	R/W
723AH-723BH	29242-29243	Es	Apparent Energy	0-999999999	kVAh	Dword	R/W
Peak							
723CH-723DH	29244-29245	Ep_Imp	Import Active Energy	0-999999999	kWh	Dword	R/W
723EH-723FH	29246-29247	Ep_Exp	Export Active Energy	0-999999999	kWh	Dword	R/W
7240H-7241H	29248-29249	Eq_Imp	Import Reactive Energy	0-999999999	kvarh	Dword	R/W

Prior Month Accumulation TOU Energy: 03H Read, 10H Write							
Address(H)	Address(D)	Symbol	Parameter	Range	Property	Data Type	Access Property
7242H-7243H	29250-29251	Eq_Exp	Export Reactive Energy	0-999999999	kvarh	Dword	R/W
7244H-7245H	29252-29253	Es	Apparent Energy	0-999999999	kVAh	Dword	R/W
Valley							
7246H-7247H	29254-29255	Ep_Imp	Import Active Energy	0-999999999	kWh	Dword	R/W
7248H-7249H	29256-29257	Ep_Exp	Export Active Energy	0-999999999	kWh	Dword	R/W
724AH-724BH	29258-29259	Eq_Imp	Import Reactive Energy	0-999999999	kvarh	Dword	R/W
724CH-724DH	29260-29261	Eq_Exp	Export Reactive Energy	0-999999999	kvarh	Dword	R/W
724EH-724FH	29262-29263	Es	Apparent Energy	0-999999999	kVAh	Dword	R/W
Normal							
7250H-7251H	29264-29265	Ep_Imp	Import Active Energy	0-999999999	kWh	Dword	R/W
7252H-7253H	29266-29267	Ep_Exp	Export Active Energy	0-999999999	kWh	Dword	R/W
7254H-7255H	29268-29269	Eq_Imp	Import Reactive Energy	0-999999999	kvarh	Dword	R/W
7256H-7257H	29270-29271	Eq_Exp	Export Reactive Energy	0-999999999	kvarh	Dword	R/W
7258H-7259H	29272-29273	Es	Apparent Energy	0-999999999	kVAh	Dword	R/W
Total							
725AH-725BH	29274-29275	Ep_Imp	Import Active Energy	0-999999999	kWh	Dword	R/W
725CH-725DH	29276-29277	Ep_Exp	Export Active Energy	0-999999999	kWh	Dword	R/W
725EH-725FH	29278-29279	Eq_Imp	Import Reactive Energy	0-999999999	kvarh	Dword	R/W
7260H-7261H	29280-29281	Eq_Exp	Export Reactive Energy	0-999999999	kvarh	Dword	R/W
7262H-7263H	29282-29283	Es	Apparent Energy	0-999999999	kVAh	Dword	R/W

Current Month Incremental TOU Energy

Table 6-23 Current Month Incremental TOU Energy Parameters

Current Month Incremental TOU Energy: 03H Read, 10H Write							
Address(H)	Address(D)	Symbol	Parameter	Range	Property	Data Type	Access Property
Sharp							
7300H-7301H	29440-29441	Ep_Imp	Import Active Energy	0-999999999	kWh	Dword	R/W
7302H-7303H	29442-29443	Ep_Exp	Export Active Energy	0-999999999	kWh	Dword	R/W
7304H-7305H	29444-29445	Eq_Imp	Import Reactive Energy	0-999999999	kvarh	Dword	R/W
7306H-7307H	29446-29447	Eq_Exp	Export Reactive Energy	0-999999999	kvarh	Dword	R/W
7308H-7309H	29448-29449	Es	Apparent	0-999999999	kVAh	Dword	R/W
Peak							
730AH-730BH	29450-29451	Ep_Imp	Import Active Energy	0-999999999	kWh	Dword	R/W
730CH-730DH	29452-29453	Ep_Exp	Export Active Energy	0-999999999	kWh	Dword	R/W
730EH-730FH	29454-29455	Eq_Imp	Import Reactive Energy	0-999999999	kvarh	Dword	R/W
7310H-7311H	29456-29457	Eq_Exp	Export Reactive Energy	0-999999999	kvarh	Dword	R/W
7312H-7313H	29458-29459	Es	Apparent Energy	0-999999999	kVAh	Dword	R/W
Valley							
7314H-7315H	29460-29461	Ep_Imp	Import Active Energy	0-999999999	kWh	Dword	R/W
7316H-7317H	29462-29463	Ep_Exp	Export Active Energy	0-999999999	kWh	Dword	R/W
7318H-7319H	29464-29465	Eq_Imp	Import Reactive Energy	0-999999999	kvarh	Dword	R/W
731AH-731BH	29466-29467	Eq_Exp	Export Reactive Energy	0-999999999	kvarh	Dword	R/W

Distributed by MicroDAQ, LLC
(603) 746-5524
www.microdaq.com

Current Month Incremental TOU Energy: 03H Read, 10H Write							
Address(H)	Address(D)	Symbol	Parameter	Range	Property	Data Type	Access Property
731CH-731DH	29468-29469	Es	Apparent Energy	0-999999999	kVAh	Dword	R/W
Normal							
731EH-731FH	29470-29741	Ep_Imp	Import Active Energy	0-999999999	kWh	Dword	R/W
7320H-7321H	29472-29473	Ep_Exp	Export Active Energy	0-999999999	kWh	Dword	R/W
7322H-7323H	29474-29475	Eq_Imp	Import Reactive Energy	0-999999999	kvarh	Dword	R/W
7324H-7325H	29476-29477	Eq_Exp	Export Reactive Energy	0-999999999	kvarh	Dword	R/W
7326H-7327H	29478-29479	Es	Apparent Energy	0-999999999	kVAh	Dword	R/W
Total							
7328H-7329H	29480-29481	Ep_Imp	Import Active Energy	0-999999999	kWh	Dword	R/W
732AH-732BH	29482-29483	Ep_Exp	Export Active Energy	0-999999999	kWh	Dword	R/W
732CH-732DH	29484-29485	Eq_Imp	Import Reactive Energy	0-999999999	kvarh	Dword	R/W
732EH-732FH	29486-29487	Eq_Exp	Export Reactive Energy	0-999999999	kvarh	Dword	R/W
7330H-7331H	29488-29489	Es	Apparent Energy	0-999999999	kVAh	Dword	R/W

Prior Month Incremental TOU Energy

Table 6-24 Prior Month Incremental TOU Energy Parameters

Prior Month Incremental TOU Energy: 03H Read, 10H Write							
Address(H)	Address(D)	Symbol	Parameter	Range	Property	Data Type	Access Property
Sharp							
7332H-7333H	29490-29491	Ep_Imp	Import Active Energy	0-999999999	kWh	Dword	R/W
7334H-7335H	29492-29493	Ep_Exp	Export Active Energy	0-999999999	kWh	Dword	R/W
7336H-7337H	29494-29495	Eq_Imp	Import Reactive Energy	0-999999999	kvarh	Dword	R/W
7338H-7339H	29496-29497	Eq_Exp	Export Reactive Energy	0-999999999	kvarh	Dword	R/W
733AH-733BH	29498-29499	Es	Apparent Energy	0-999999999	kVAh	Dword	R/W
Peak							
733CH-733DH	29500-29501	Ep_Imp	Import Active Energy	0-999999999	kWh	Dword	R/W
733EH-733FH	29502-29503	Ep_Exp	Export Active Energy	0-999999999	kWh	Dword	R/W
7340H-7341H	29504-29505	Eq_Imp	Import Reactive Energy	0-999999999	kvarh	Dword	R/W
7342H-7343H	29506-29507	Eq_Exp	Export Reactive Energy	0-999999999	kvarh	Dword	R/W
7344H-7345H	29508-29509	Es	Apparent Energy	0-999999999	kVAh	Dword	R/W
Valley							
7346H-7347H	29510-29511	Ep_Imp	Import Active Energy	0-999999999	kWh	Dword	R/W
7348H-7349H	29512-29513	Ep_Exp	Export Active Energy	0-999999999	kWh	Dword	R/W
734AH-734BH	29514-29515	Eq_Imp	Import Reactive Energy	0-999999999	kvarh	Dword	R/W
734CH-734DH	29516-29517	Eq_Exp	Export Reactive Energy	0-999999999	kvarh	Dword	R/W
734EH-734FH	29518-29519	Es	Apparent Energy	0-999999999	kVA	Dword	R/W
Normal							
7350H-7351H	29520-29521	Ep_Imp	Import Active Energy	0-999999999	kWh	Dword	R/W
7352H-7353H	29522-29523	Ep_Exp	Export Active Energy	0-999999999	kWh	Dword	R/W
7354H-7355H	29524-29525	Eq_Imp	Import Reactive Energy	0-999999999	kvarh	Dword	R/W
7356H-7357H	29526-29527	Eq_Exp	Export Reactive Energy	0-999999999	kvarh	Dword	R/W
7358H-7359H	29528-29529	Es	Apparent Energy	0-999999999	kVAh	Dword	R/W

Prior Month Incremental TOU Energy: 03H Read, 10H Write							
Address(H)	**Address(D)**	**Symbol**	**Parameter**	**Range**	**Property**	**Data Type**	**Access Property**
Total							
735AH-735BH	29530-29531	Ep_Imp	Import Active Energy	0-999999999	kWh	Dword	R/W
735CH-735DH	29532-29533	Ep_Exp	Export Active Energy	0-999999999	kWh	Dword	R/W
735EH-735FH	29534-29535	Eq_Imp	Import Reactive Energy	0-999999999	kvarh	Dword	R/W
7360H-7361H	29536-29537	Eq_Exp	Export Reactive Energy	0-999999999	kvarh	Dword	R/W
7363H-7363H	29538-29539	Es	Apparent Energy	0-999999999	kVAh	Dword	R/W

Current Month Maximum Demand TOU

Table 6-25 Current Month Maximum Demand TOU Parameters

Current Month Maximum Demand TOU Energy: 03H Read, 10H Write							
Address(H)	**Address(D)**	**Symbol**	**Parameter**	**Relationship**	**Range**	**Data Type**	**Access Proper-ty**
Sharp							
7500H	29952	Ep_Imp	Max Demand	Rx/10	-32768~32767	Int	R
7501H-7503H	29953-29955		Timestamp	YY/MM; DD/HH; Min/Sec			
7504H	29956	Ep_Exp	Max Demand	Rx/10	-32768~32767	Int	R
7505H-7507H	29957-29959		Timestamp	YY/MM; DD/HH; Min/Sec			
7508H	29960	Eq_Imp	Max Demand	Rx/10	-32768~32767	Int	R
7509H-750BH	29961-29963		Timestamp	YY/MM; DD/HH; Min/Sec			
750CH	29964	Eq_Exp	Max Demand	Rx/10	-32768~32767	Int	R
750DH-750FH	29965-29967		Timestamp	YY/MM; DD/HH; Min/Sec			
7510H	29968	Es	Max Demand	Rx/10	-32768~32767	Int	R
7511H-7513H	29969-29971		Timestamp	YY/MM; DD/HH; Min/Sec			
7514H	29972	Ia	Max Demand	Rx*(CT1/CT2)/1000	-32768~32767	Int	R
7515H-7517H	29973-29975		Timestamp	YY/MM; DD/HH; Min/Sec			
7518H	29976	Ib	Max Demand	Rx*(CT1/CT2)/1000	-32768~32767	Int	R
7519H-751BH	29977-29979		Timestamp	YY/MM; DD/HH; Min/Sec			

Distributed by MicroDAQ, LLC
(603) 746-5524
www.microdaq.com

Current Month Maximum Demand TOU Energy: 03H Read, 10H Write							
Address(H)	**Address(D)**	**Symbol**	**Parameter**	**Relationship**	**Range**	**Data Type**	**Access Property**
751CH	29980	Ic	Max Demand	Rx*(CT1/CT2)/1000	-32768~32767	Int	R
751DH-751FH	29981-29983		Timestamp	YY/MM; DD/HH; Min/Sec			
Peak							
7520H	29984	Ep_Imp	Max Demand	Rx/10	-32768~32767	Int	R
7521H-7523H	29985-29987		Timestamp	YY/MM; DD/HH; Min/Sec			
7524H	29988	Ep_Exp	Max Demand	Rx/10	-32768~32767	Int	R
7525H-7527H	29989-29991		Timestamp	YY/MM; DD/HH; Min/Sec			
7528H	29992	Eq_Imp	Max Demand	Rx/10	-32768~32767	Int	R
7529H-752BH	29993-29995		Timestamp	YY/MM; DD/HH; Min/Sec			
752CH	29996	Eq_Exp	Max Demand	Rx/10	-32768~32767	Int	R
752DH-752FH	29997-29999		Timestamp	YY/MM; DD/HH; Min/Sec			
7530H	30000	Es	Max Demand	Rx/10	-32768~32767	Int	R
7531H-7533H	30001-30003		Timestamp	YY/MM; DD/HH; Min/Sec			
7534H	30004	Ia	Max Demand	Rx*(CT1/CT2)/1000	-32768~32767	Int	R
7535H-7537H	30005-30007		Timestamp	YY/MM; DD/HH; Min/Sec			
7538H	30008	Ib	Max Demand	Rx*(CT1/CT2)/1000	-32768~32767	Int	R
7539H-753BH	30009-30011		Timestamp	YY/MM; DD/HH; Min/Sec			
753CH	30012	Ic	Max Demand	Rx*(CT1/CT2)/1000	-32768~32767	Int	R
753DH-753FH	30013-30015		Timestamp	YY/MM; DD/HH; Min/Sec			
Valley							
7540H	30016	Ep_Imp	Max Demand	Rx/10	-32768~32767	Int	R

Current Month Maximum Demand TOU Energy: 03H Read, 10H Write							
Address(H)	**Address(D)**	**Symbol**	**Parameter**	**Relationship**	**Range**	**Data Type**	**Access Property**
7541H-7543H	30017-30019		Timestamp	YY/MM; DD/HH; Min/Sec			
7544H	30020	Ep_Exp	Max Demand	Rx/10	-32768~32767	Int	R
7545H-7547H	30021-30023		Timestamp	YY/MM; DD/HH; Min/Sec			
7548H	30024	Eq_Imp	Max Demand	Rx/10	-32768~32767	Int	R
7549H-754BH	30025-30026		Timestamp	YY/MM; DD/HH; Min/Sec			
754CH	30027	Eq_Exp	Max Demand	Rx/10	-32768~32767	Int	R
754DH-754FH	30028-30031		Timestamp	YY/MM; DD/HH; Min/Sec			
7550H	30032	Es	Max Demand	Rx/10	-32768~32767	Int	R
7551H-7553H	30033-30035		Timestamp	YY/MM; DD/HH; Min/Sec			
7554H	30036	Ia	Max Demand	Rx*(CT1/CT2)/1000	-32768~32767	Int	R
7555H-7557H	30037-30039		Timestamp	YY/MM; DD/HH; Min/Sec			
7558H	30040	Ib	Max Demand	Rx*(CT1/CT2)/1000	-32768~32767	Int	R
7559H-755BH	30041-30043		Timestamp	YY/MM; DD/HH; Min/Sec			
755CH	30044	Ic	Max Demand	Rx*(CT1/CT2)/1000	-32768~32767	Int	R
755DH-755FH	30045-30047		Timestamp	YY/MM; DD/HH; Min/Sec			
Normal							
7560H	30048	Ep_Imp	Max Demand	Rx/10	-32768~32767	Int	R
7561H-7563H	30049-30051		Timestamp	YY/MM; DD/HH; Min/Sec			
7564H	30052	Ep_Exp	Max Demand	Rx/10	-32768~32767	Int	R
7565H-7567H	30053-30055		Timestamp	YY/MM; DD/HH; Min/Sec			

Distributed by MicroDAQ, LLC
(603) 746-5524
www.microdaq.com

Current Month Maximum Demand TOU Energy: 03H Read, 10H Write							
Address(H)	**Address(D)**	**Symbol**	**Parameter**	**Relationship**	**Range**	**Data Type**	**Access Property**
7568H	30056	Eq_Imp	Max Demand	Rx/10	-32768~32767	Int	R
7569H-756BH	30057-30059		Timestamp	YY/MM; DD/HH; Min/Sec			
756CH	30060	Eq_Exp	Max Demand	Rx/10	-32768~32767	Int	R
756DH-756FH	30061-30063		Timestamp	YY/MM; DD/HH; Min/Sec			
7570H	30064	Es	Max Demand	Rx/10	-32768~32767	Int	R
7571H-7573H	30065-30067		Timestamp	YY/MM; DD/HH; Min/Sec			
7574H	30068	Ia	Max Demand	Rx*(CT1/CT2)/1000	-32768~32767	Int	R
7575H-7577H	30069-30071		Timestamp	YY/MM; DD/HH; Min/Sec			
7578H	30072	Ib	Max Demand	Rx*(CT1/CT2)/1000	-32768~32767	Int	R
7579H-757BH	30073-30075		Timestamp	YY/MM; DD/HH; Min/Sec			
757CH	30076	Ic	Max Demand	Rx*(CT1/CT2)/1000	-32768~32767	Int	R
757DH-757FH	30077-30079		Timestamp	YY/MM; DD/HH; Min/Sec			
Total							
7580H	30080	Ep_Imp	Max Demand	Rx/10	-32768~32767	Int	R
7581H-7583H	30081-30083		Timestamp	YY/MM; DD/HH; Min/Sec			
7584H	30084	Ep_Exp	Max Demand	Rx/10	-32768~32767	Int	R
7585H-7587H	30085-30087		Timestamp	YY/MM; DD/HH; Min/Sec			
7588H	30088	Eq_Imp	Max Demand	Rx/10	-32768~32767	Int	R
7589H-758BH	30089-30091		Timestamp	YY/MM; DD/HH; Min/Sec			
758CH	30092	Eq_Exp	Max Demand	Rx/10	-32768~32767	Int	R

Current Month Maximum Demand TOU Energy: 03H Read, 10H Write							
Address(H)	**Address(D)**	**Symbol**	**Parameter**	**Relationship**	**Range**	**Data Type**	**Access Property**
758DH-758FH	30093-30095		Timestamp	YY/MM; DD/HH; Min/Sec			
7590H	30096	Es	Max Demand	Rx/10	-32768~32767	Int	R
7591H-7593H	30097-30099		Timestamp	YY/MM; DD/HH; Min/Sec			
7594H	30100	Ia	Max Demand	Rx*(CT1/CT2)/1000	-32768~32767	Int	R
7595H-7597H	30101-30103		Timestamp	YY/MM; DD/HH; Min/Sec			
7598H	30104	Ib	Max Demand	Rx*(CT1/CT2)/1000	-32768~32767	Int	R
7599H-759BH	30105-30107		Timestamp	YY/MM; DD/HH; Min/Sec			
759CH	30108	Ic	Max Demand	Rx*(CT1/CT2)/1000	-32768~32767	Int	R
759DH-759FH	30109-30111		Timestamp	YY/MM; DD/HH; Min/Sec			

Prior Month Maximum Demand

Table 6-26 Prior Month Maximum Demand Parameters

Previous Month Maximum Demand TOU Energy: 03H, 10H Write							
Address(H)	**Address(D)**	**Symbol**	**Parameter**	**Relationship**	**Range**	**Data Type**	**Access Property**
Sharp							
7600H	30208	Ep_Imp	Max Demand	Rx/10	-32768~32767	Int	R
7601H-7603H	30209-30211		Timestamp	YY/MM; DD/HH; Min/Sec			
7604H	30212	Ep_Exp	Max Demand	Rx/10	-32768~32767	Int	R
7605H-7607H	30213-30215		Timestamp	YY/MM; DD/HH; Min/Sec			
7608H	30216	Eq_Imp	Max Demand	Rx/10	-32768~32767	Int	R
7609H-760BH	30217-30219		Timestamp	YY/MM; DD/HH; Min/Sec			
760CH	30220	Ep_Exp	Max Demand	Rx/10	-32768~32767	Int	R

Distributed by MicroDAQ, LLC
(603) 746-5524
www.microdaq.com

Previous Month Maximum Demand TOU Energy: 03H, 10H Write							
Address(H)	**Address(D)**	**Symbol**	**Parameter**	**Relationship**	**Range**	**Data Type**	**Access Property**
760DH-760FH	30221-30223		Timestamp	YY/MM; DD/HH; Min/Sec			
7610H	30224	Es	Max Demand	Rx/10	-32768~32767	Int	R
7611H-7613H	30225-30227		Timestamp	YY/MM; DD/HH; Min/Sec			
7614H	30228	Ia	Max Demand	Rx*(CT1/CT2)/1000	-32768~32767	Int	R
7615H-7617H	30229-30231		Timestamp	YY/MM; DD/HH; Min/Sec			
7618H	30232	Ib	Max Demand	Rx*(CT1/CT2)/1000	-32768~32767	Int	R
7619H-761BH	30233-30235		Timestamp	YY/MM; DD/HH; Min/Sec			
761CH	30236	Ic	Max Demand	Rx*(CT1/CT2)/1000	-32768~32767	Int	R
761DH-761FH	30237-30239		Timestamp	YY/MM; DD/HH; Min/Sec			
Peak							
7620H	30240	Ep_Imp	Max Demand	Rx/10	-32768~32767	Int	R
7621H-7623H	30241-30243		Timestamp	YY/MM; DD/HH; Min/Sec			
7624H	30244	Ep_Exp	Max Demand	Rx/10	-32768~32767	Int	R
7625H-7627H	30245-30247		Timestamp	YY/MM; DD/HH; Min/Sec			
7628H	30248	Eq_Imp	Max Demand	Rx/10	-32768~32767	Int	R
7629H-762BH	30249-30251		Timestamp	YY/MM; DD/HH; Min/Sec			
762CH	30252	Eq_Exp	Max Demand	Rx/10	-32768~32767	Int	R
762DH-762FH	30253-30255		Timestamp	YY/MM; DD/HH; Min/Sec			
7630H	30256	Es	Max Demand	Rx/10	-32768~32767	Int	R
7631H-7633H	30257-30259		Timestamp	YY/MM; DD/HH; Min/Sec			

Previous Month Maximum Demand TOU Energy: 03H, 10H Write							
Address(H)	**Address(D)**	**Symbol**	**Parameter**	**Relationship**	**Range**	**Data Type**	**Access Property**
7634H	30260	Ia	Max Demand	Rx*(CT1/CT2)/1000	-32768~32767	Int	R
7635H-7637H	30261-30263		Timestamp	YY/MM; DD/HH; Min/Sec			
7638H	30264	Ib	Max Demand	Rx*(CT1/CT2)/1000	-32768~32767	Int	R
7639H-763BH	30265-30267		Timestamp	YY/MM; DD/HH; Min/Sec			
763CH	30268	Ic	Max Demand	Rx*(CT1/CT2)/1000	-32768~32767	Int	R
763DH-763FH	30269-30271		Timestamp	YY/MM; DD/HH; Min/Sec			
Valley							
7640H	30272	Ep_Imp	Max Demand	Rx/10	-32768~32767	Int	R
7641H-7643H	30273-30275		Timestamp	YY/MM; DD/HH; Min/Sec			
7644H	30276	Ep_Exp	Max Demand	Rx/10	-32768~32767	Int	R
7645H-7647H	30277-30279		Timestamp	YY/MM; DD/HH; Min/Sec			
7648H	30280	Eq_Imp	Max Demand	Rx/10	-32768~32767	Int	R
7649H-764BH	30281-30283		Timestamp	YY/MM; DD/HH; Min/Sec			
764CH	30284	Eq_Exp	Max Demand	Rx/10	-32768~32767	Int	R
764DH-764FH	30285-30287		Timestamp	YY/MM; DD/HH; Min/Sec			
7650H	30288	Es	Max Demand	Rx/10	-32768~32767	Int	R
7651H-7653H	30289-30291		Timestamp	YY/MM; DD/HH; Min/Sec			
7654H	30292	Ia	Max Demand	Rx*(CT1/CT2)/1000	-32768~32767	Int	R
7655H-7657H	30293-30295		Timestamp	YY/MM; DD/HH; Min/Sec			
7658H	30296	Ib	Max Demand	Rx*(CT1/CT2)/1000	-32768~32767	Int	R

Distributed by MicroDAQ, LLC
(603) 746-5524
www.microdaq.com

Previous Month Maximum Demand TOU Energy: 03H, 10H Write							
Address(H)	**Address(D)**	**Symbol**	**Parameter**	**Relationship**	**Range**	**Data Type**	**Access Property**
7659H-765BH	30297-30299		Timestamp	YY/MM; DD/HH; Min/Sec			
765CH	30300	Ic	Max Demand	Rx*(CT1/CT2)/1000	-32768~32767	Int	R
765DH-765FH	30301-30303		Timestamp	YY/MM; DD/HH; Min/Sec			
Normal							
7660H	30304	Ep_Imp	Max Demand	Rx/10	-32768~32767	Int	R
7661H-7663H	30305-30307		Timestamp	YY/MM; DD/HH; Min/Sec			
7664H	30308	Ep_Exp	Max Demand	Rx/10	-32768~32767	Int	R
7665H-7667H	30309-30311		Timestamp	YY/MM; DD/HH; Min/Sec			
7668H	30312	Eq_Imp	Max Demand	Rx/10	-32768~32767	Int	R
7669H-766BH	30313-30315		Timestamp	YY/MM; DD/HH; Min/Sec			
766CH	30316	Eq_Exp	Max Demand	Rx/10	-32768~32767	Int	R
766DH-766FH	30317-30319		Timestamp	YY/MM; DD/HH; Min/Sec			
7670H	30320	Es	Max Demand	Rx/10	-32768~32767	Int	R
7671H-7673H	30321-30323		Timestamp	YY/MM; DD/HH; Min/Sec			
7674H	30324	Ia	Max Demand	Rx*(CT1/CT2)/1000	-32768~32767	Int	R
7675H-7677H	30325-30327		Timestamp	YY/MM; DD/HH; Min/Sec			
7678H	30328	Ib	Max Demand	Rx*(CT1/CT2)/1000	-32768~32767	Int	R
7679H-767BH	30329-30331		Timestamp	YY/MM; DD/HH; Min/Sec			
767CH	30332	Ic	Max Demand	Rx*(CT1/CT2)/1000	-32768~32767	Int	R
767DH-767FH	30333-30334		Timestamp	YY/MM; DD/HH; Min/Sec			

Previous Month Maximum Demand TOU Energy: 03H, 10H Write							
Address(H)	**Address(D)**	**Symbol**	**Parameter**	**Relationship**	**Range**	**Data Type**	**Access Property**
Total							
7680H	30336	Ep_Imp	Max Demand	Rx/10	-32768~32767	Int	R
7681H-7683H	30337-30339		Timestamp	YY/MM; DD/HH; Min/Sec			
7684H	30340	Ep_Exp	Max Demand	Rx/10	-32768~32767	Int	R
7685H-7687H	30341-30343		Timestamp	YY/MM; DD/HH; Min/Sec			
7688H	30344	Eq_Imp	Max Demand	Rx/10	-32768~32767	Int	R
7689H-768BH	30345-30347		Timestamp	YY/MM; DD/HH; Min/Sec			
768CH	30348	Eq_Exp	Max Demand	Rx/10	-32768~32767	Int	R
768DH-768FH	30349-30351		Timestamp	YY/MM; DD/HH; Min/Sec			
7690H	30352	Es	Max Demand	Rx/10	-32768~32767	Int	R
7691H-7693H	30353-30355		Timestamp	YY/MM; DD/HH; Min/Sec			
7694H	30356	Ia	Max Demand	Rx*(CT1/CT2)/1000	-32768~32767	Int	R
7695H-7697H	30357-30359		Timestamp	YY/MM; DD/HH; Min/Sec			
7698H	30360	Ib	Max Demand	Rx*(CT1/CT2)/1000	-32768~32767	Int	R
7699H-769BH	30361-30363		Timestamp	YY/MM; DD/HH; Min/Sec			
769CH	30364	Ic	Max Demand	Rx*(CT1/CT2)/1000	-32768~32767	Int	R
769DH-769FH	30365-30366		Timestamp	YY/MM; DD/HH; Min/Sec			

6.3.10 Power Quality Parameters

THD, Harmonics, odd and even THD, Crest Factor, THFF, and K factor are all stored within this section.

NOTE: When the wiring is set to 2LL or 3LL, the voltage parameters refer to line voltage. For other wiring settings, the voltage parameters refer to phase voltage.

Distributed by MicroDAQ, LLC
(603) 746-5524
www.microdaq.com

THD Parameters

Table 6-27 THD Parameters

Power Quality: 03H Read							
Address(H)	**Address(D)**	**Parameter**	**Relationship**	**Property**	**Range**	**Data Type**	**Access Property**
405AH	16474	THD_V1(V12)	THD=Rx/100	%	≥0	int16	R
405BH	16475	THD_V2(V31)	THD=Rx/100	%	≥0	int16	R
405CH	16476	THD_V3(V23)	THD=Rx/100	%	≥0	int16	R
405DH	16477	THD_avg	THD=Rx/100	%	≥0	int16	R
405EH	16478	THD_I1	THD=Rx/100	%	≥0	int16	R
405FH	16479	THD_I2	THD=Rx/100	%	≥0	int16	R
4060H	16480	THD_I3	THD=Rx/100	%	≥0	int16	R
4061H	16481	THD_Iavg	THD=Rx/100	%	≥0	int16	R

Voltage V1(V12) Harmonics

Table 6-28 Voltage V1(V12) Harmonics Parameters

Voltage Harmonics, Even & Odd Harmonics, Crest Factor: 03H Read							
Address(H)	**Address(D)**	**Parameter**	**Relationship**	**Proper-ty**	**Range**	**Data Type**	**Access Property**
4062H	16482	V1(V12) 2nd Harmonic	THD=Rx/100	%	≥0	int16	R
4063H	16483	V1(V12) 3rd Harmonic	THD=Rx/100	%	≥0	int16	R
4064H	16484	V1(V12) 4th Harmonic	THD=Rx/100	%	≥0	int16	R
4065H	16485	V1(V12) 5th Harmonic	THD=Rx/100	%	≥0	int16	R
4066H	16486	V1(V12) 6th Harmonic	THD=Rx/100	%	≥0	int16	R
4067H	16487	V1(V12) 7th Harmonic	THD=Rx/100	%	≥0	int16	R
4068H	16488	V1(V12) 8th Harmonic	THD=Rx/100	%	≥0	int16	R
4069H	16489	V1(V12) 9th Harmonic	THD=Rx/100	%	≥0	int16	R
406AH	16490	V1(V12) 10th Harmonic	THD=Rx/100	%	≥0	int16	R
406BH	16491	V1(V12) 11th Harmonic	THD=Rx/100	%	≥0	int16	R
406CH	16492	V1(V12) 12th Harmonic	THD=Rx/100	%	≥0	int16	R
406DH	16493	V1(V12) 13th Harmonic	THD=Rx/100	%	≥0	int16	R
406EH	16494	V1(V12) 14th Harmonic	THD=Rx/100	%	≥0	int16	R
406FH	16495	V1(V12) 15th Harmonic	THD=Rx/100	%	≥0	int16	R
4070H	16496	V1(V12) 16th Harmonic	THD=Rx/100	%	≥0	int16	R
4071H	16497	V1(V12) 17th Harmonic	THD=Rx/100	%	≥0	int16	R
4072H	16498	V1(V12) 18th Harmonic	THD=Rx/100	%	≥0	int16	R
4073H	16499	V1(V12) 19th Harmonic	THD=Rx/100	%	≥0	int16	R
4074H	16500	V1(V12) 20th Harmonic	THD=Rx/100	%	≥0	int16	R
4075H	16501	V1(V12) 21st Harmonic	THD=Rx/100	%	≥0	int16	R
4076H	16502	V1(V12) 22nd Harmonic	THD=Rx/100	%	≥0	int16	R
4077H	16503	V1(V12) 23rd Harmonic	THD=Rx/100	%	≥0	int16	R
4078H	16504	V1(V12) 24th Harmonic	THD=Rx/100	%	≥0	int16	R
4079H	16505	V1(V12) 25th Harmonic	THD=Rx/100	%	≥0	int16	R
407AH	16506	V1(V12) 26th Harmonic	THD=Rx/100	%	≥0	int16	R
407BH	16507	V1(V12) 27th Harmonic	THD=Rx/100	%	≥0	int16	R
407CH	16508	V1(V12) 28th Harmonic	THD=Rx/100	%	≥0	int16	R

Voltage Harmonics, Even & Odd Harmonics, Crest Factor: 03H Read							
Address(H)	Address(D)	Parameter	Relationship	Proper-ty	Range	Data Type	Access Property
407DH	16509	V1(V12) 29th Harmonic	THD=Rx/100	%	≥0	int16	R
407EH	16510	V1(V12) 30th Harmonic	THD=Rx/100	%	≥0	int16	R
407FH	16511	V1(V12) 31st Harmonic	THD=Rx/100	%	≥0	int16	R
4500H	17664	V1(V12) 32nd Harmonic	THD=Rx/100	%	≥0	Word	R
4501H	17665	V1(V12) 33rd Harmonic	THD=Rx/100	%	≥0	Word	R
4502H	17666	V1(V12) 34th Harmonic	THD=Rx/100	%	≥0	Word	R
4503H	17667	V1(V12) 35th Harmonic	THD=Rx/100	%	≥0	Word	R
4504H	17668	V1(V12) 36th Harmonic	THD=Rx/100	%	≥0	Word	R
4505H	17669	V1(V12) 37th Harmonic	THD=Rx/100	%	≥0	Word	R
4506H	17670	V1(V12) 38th Harmonic	THD=Rx/100	%	≥0	Word	R
4507H	17671	V1(V12) 39th Harmonic	THD=Rx/100	%	≥0	Word	R
4508H	17672	V1(V12) 40th Harmonic	THD=Rx/100	%	≥0	Word	R
4509H	17673	V1(V12) 41st Harmonic	THD=Rx/100	%	≥0	Word	R
450AH	17674	V1(V12) 42nd Harmonic	THD=Rx/100	%	≥0	Word	R
450BH	17675	V1(V12) 43rd Harmonic	THD=Rx/100	%	≥0	Word	R
450CH	17676	V1(V12) 44th Harmonic	THD=Rx/100	%	≥0	Word	R
450DH	17677	V1(V12) 45th Harmonic	THD=Rx/100	%	≥0	Word	R
450EH	17678	V1(V12) 46th Harmonic	THD=Rx/100	%	≥0	Word	R
450FH	17679	V1(V12) 47th Harmonic	THD=Rx/100	%	≥0	Word	R
4510H	17680	V1(V12) 48th Harmonic	THD=Rx/100	%	≥0	Word	R
4511H	17681	V1(V12) 49th Harmonic	THD=Rx/100	%	≥0	Word	R
4512H	17682	V1(V12) 50th Harmonic	THD=Rx/100	%	≥0	Word	R
4513H	17683	V1(V12) 51st Harmonic	THD=Rx/100	%	≥0	Word	R
4514H	17684	V1(V12) 52nd Harmonic	THD=Rx/100	%	≥0	Word	R
4515H	17685	V1(V12) 53rd Harmonic	THD=Rx/100	%	≥0	Word	R
4516H	17686	V1(V12) 54th Harmonic	THD=Rx/100	%	≥0	Word	R
4517H	17687	V1(V12) 55th Harmonic	THD=Rx/100	%	≥0	Word	R
4518H	17688	V1(V12) 56th Harmonic	THD=Rx/100	%	≥0	Word	R
4519H	17689	V1(V12) 57th Harmonic	THD=Rx/100	%	≥0	Word	R
451AH	17690	V1(V12) 58th Harmonic	THD=Rx/100	%	≥0	Word	R
451BH	17691	V1(V12) 59th Harmonic	THD=Rx/100	%	≥0	Word	R
451CH	17692	V1(V12) 60th Harmonic	THD=Rx/100	%	≥0	Word	R
451DH	17693	V1(V12) 61st Harmonic	THD=Rx/100	%	≥0	Word	R
451EH	17694	V1(V12) 62nd Harmonic	THD=Rx/100	%	≥0	Word	R
451FH	17695	V1(V12) 63rd Harmonic	THD=Rx/100	%	≥0	Word	R
4080H	16512	Odd THD_V1(V12)	THD=Rx/100	%	≥0	int16	R
4081H	16513	Even THD_V1(V12)	THD=Rx/100	%	≥0	int16	R
4082H	16514	Crest Factor V1(V12)	CF=Rx/100	%	0~65535	int16	R
4083H	16515	THFF_V1(V12)	THFF=Rx/100	%	≥0	int16	R

Distributed by MicroDAQ, LLC
(603) 746-5524
www.microdaq.com

Voltage V2(V31) Harmonics

Table 6-29 Voltage V2(V31) Harmonics Parameters

Voltage Harmonics, Even & Odd Harmonics, Crest Factor: 03H Read							
Address(H)	Address(D)	Parameter	Relationship	Proper-ty	Range	Data Type	Access Property
4084H	16516	V2(V31) 2nd Harmonic	THD=Rx/100	%	≥0	int16	R
4085H	16517	V2(V31) 3rd Harmonic	THD=Rx/100	%	≥0	int16	R
4086H	16518	V2(V31) 4th Harmonic	THD=Rx/100	%	≥0	int16	R
4087H	16519	V2(V31) 5th Harmonic	THD=Rx/100	%	≥0	int16	R
4088H	16520	V2(V31) 6th Harmonic	THD=Rx/100	%	≥0	int16	R
4089H	16521	V2(V31) 7th Harmonic	THD=Rx/100	%	≥0	int16	R
408AH	16522	V2(V31) 8th Harmonic	THD=Rx/100	%	≥0	int16	R
408BH	16523	V2(V31) 9th Harmonic	THD=Rx/100	%	≥0	int16	R
408CH	16524	V2(V31) 10th Harmonic	THD=Rx/100	%	≥0	int16	R
408DH	16525	V2(V31) 11th Harmonic	THD=Rx/100	%	≥0	int16	R
408EH	16526	V2(V31) 12th Harmonic	THD=Rx/100	%	≥0	int16	R
408FH	16527	V2(V31) 13th Harmonic	THD=Rx/100	%	≥0	int16	R
4090H	16528	V2(V31) 14th Harmonic	THD=Rx/100	%	≥0	int16	R
4091H	16529	V2(V31) 15th Harmonic	THD=Rx/100	%	≥0	int16	R
4092H	16530	V2(V31) 16th Harmonic	THD=Rx/100	%	≥0	int16	R
4093H	16531	V2(V31) 17th Harmonic	THD=Rx/100	%	≥0	int16	R
4094H	16532	V2(V31) 18th Harmonic	THD=Rx/100	%	≥0	int16	R
4095H	16533	V2(V31) 19th Harmonic	THD=Rx/100	%	≥0	int16	R
4096H	16534	V2(V31) 20th Harmonic	THD=Rx/100	%	≥0	int16	R
4097H	16535	V2(V31) 21st Harmonic	THD=Rx/100	%	≥0	int16	R
4098H	16536	V2(V31) 22nd Harmonic	THD=Rx/100	%	≥0	int16	R
4099H	16537	V2(V31) 23rd Harmonic	THD=Rx/100	%	≥0	int16	R
409AH	16538	V2(V31) 24th Harmonic	THD=Rx/100	%	≥0	int16	R
409BH	16539	V2(V31) 25th Harmonic	THD=Rx/100	%	≥0	int16	R
409CH	16540	V2(V31) 26th Harmonic	THD=Rx/100	%	≥0	int16	R
409DH	16541	V2(V31) 27th Harmonic	THD=Rx/100	%	≥0	int16	R
409EH	16542	V2(V31) 28th Harmonic	THD=Rx/100	%	≥0	int16	R
409FH	16543	V2(V31) 29th Harmonic	THD=Rx/100	%	≥0	int16	R
40A0H	16544	V2(V31) 30th Harmonic	THD=Rx/100	%	≥0	int16	R
40A1H	16545	V2(V31) 31st Harmonic	THD=Rx/100	%	≥0	int16	R
4520H	17696	V2(V31) 32nd Harmonic	THD=Rx/100	%	≥0	Word	R
4521H	17697	V2(V31) 33rd Harmonic	THD=Rx/100	%	≥0	Word	R
4522H	17698	V2(V31) 34th Harmonic	THD=Rx/100	%	≥0	Word	R
4523H	17699	V2(V31) 35th Harmonic	THD=Rx/100	%	≥0	Word	R
4524H	17700	V2(V31) 36th Harmonic	THD=Rx/100	%	≥0	Word	R
4525H	17701	V2(V31) 37th Harmonic	THD=Rx/100	%	≥0	Word	R
4526H	17702	V2(V31) 38th Harmonic	THD=Rx/100	%	≥0	Word	R
4527H	17703	V2(V31) 39th Harmonic	THD=Rx/100	%	≥0	Word	R
4528H	17704	V2(V31) 40th Harmonic	THD=Rx/100	%	≥0	Word	R
4529H	17705	V2(V31) 41st Harmonic	THD=Rx/100	%	≥0	Word	R
452AH	17706	V2(V31) 42nd Harmonic	THD=Rx/100	%	≥0	Word	R

Voltage Harmonics, Even & Odd Harmonics, Crest Factor: 03H Read							
Address(H)	Address(D)	Parameter	Relationship	Proper-ty	Range	Data Type	Access Property
452BH	17707	V2(V31) 43rd Harmonic	THD=Rx/100	%	≥0	Word	R
452CH	17708	V2(V31) 44th Harmonic	THD=Rx/100	%	≥0	Word	R
425DH	17709	V2(V31) 45th Harmonic	THD=Rx/100	%	≥0	Word	R
452EH	17710	V2(V31) 46th Harmonic	THD=Rx/100	%	≥0	Word	R
452FH	17711	V2(V31) 47th Harmonic	THD=Rx/100	%	≥0	Word	R
4530H	17712	V2(V31) 48th Harmonic	THD=Rx/100	%	≥0	Word	R
4531H	17713	V2(V31) 49th Harmonic	THD=Rx/100	%	≥0	Word	R
4532H	17714	V2(V31) 50th Harmonic	THD=Rx/100	%	≥0	Word	R
4533H	17715	V2(V31) 51st Harmonic	THD=Rx/100	%	≥0	Word	R
4534H	17716	V2(V31) 52nd Harmonic	THD=Rx/100	%	≥0	Word	R
4535H	17717	V2(V31) 53rd Harmonic	THD=Rx/100	%	≥0	Word	R
4536H	17718	V2(V31) 54th Harmonic	THD=Rx/100	%	≥0	Word	R
4537H	17719	V2(V31) 55th Harmonic	THD=Rx/100	%	≥0	Word	R
4538H	17720	V2(V31) 56th Harmonic	THD=Rx/100	%	≥0	Word	R
4539H	17721	V2(V31) 57th Harmonic	THD=Rx/100	%	≥0	Word	R
453AH	17722	V2(V31) 58th Harmonic	THD=Rx/100	%	≥0	Word	R
453BH	17723	V2(V31) 59th Harmonic	THD=Rx/100	%	≥0	Word	R
453CH	17724	V2(V31) 60th Harmonic	THD=Rx/100	%	≥0	Word	R
453DH	17725	V2(V31) 61st Harmonic	THD=Rx/100	%	≥0	Word	R
453EH	17726	V2(V31) 62nd Harmonic	THD=Rx/100	%	≥0	Word	R
453FH	17727	V2(V31) 63rd Harmonic	THD=Rx/100	%	≥0	Word	R
40A2H	16546	Odd THD_V2(V31)	THD=Rx/100	%	≥0	int16	R
40A3H	16547	Even THD_V2(V31)	THD=Rx/100	%	≥0	int16	R
40A4H	16548	Crest Factor V2(V31)	THD=Rx/100	%	≥0	int16	R
40A5H	16549	THFF_V2(V31)	THFF=Rx/100	%	≥0	int16	R

Voltage V3(V23) Harmonics

Table 6-30 Voltage V3(V23) Harmonics Parameters

Voltage Harmonics, Even & Odd Harmonics, Crest Factor: 03H							
Address(H)	Address(D)	Parameter	Relationship	Proper-ty	Range	Data Type	Access Property
40A6H	16550	V3(V23) 2nd Harmonic	THD=Rx/100	%	≥0	int16	R
40A7H	16551	V3(V23) 3rd Harmonic	THD= Rx/100	%	≥0	int16	R
40A8H	16552	V3(V23) 4th Harmonic	THD=Rx/100	%	≥0	int16	R
40A9H	16553	V3(V23) 5th Harmonic	THD=Rx/100	%	≥0	int16	R
40AAH	16554	V3(V23) 6th Harmonic	THD=Rx/100	%	≥0	int16	R
40ABH	16555	V3(V23) 7th Harmonic	THD=Rx/100	%	≥0	int16	R
40ACH	16556	V3(V23) 8th Harmonic	THD=Rx/100	%	≥0	int16	R
40ADH	16557	V3(V23) 9th Harmonic	THD=Rx/100	%	≥0	int16	R
40AEH	16558	V3(V23) 10th Harmonic	THD=Rx/100	%	≥0	int16	R
40AFH	16559	V3(V23) 11th Harmonic	THD=Rx/100	%	≥0	int16	R
40B0H	16560	V3(V23) 12th Harmonic	THD=Rx/100	%	≥0	int16	R
40B1H	16561	V3(V23) 13th Harmonic	THD=Rx/100	%	≥0	int16	R

Distributed by MicroDAQ, LLC
(603) 746-5524
www.microdaq.com

Voltage Harmonics, Even & Odd Harmonics, Crest Factor: 03H							
Address(H)	Address(D)	Parameter	Relationship	Proper-ty	Range	Data Type	Access Property
40B2H	16562	V3(V23) 14th Harmonic	THD=Rx/100	%	≥0	int16	R
40B3H	16563	V3(V23) 15th Harmonic	THD=Rx/100	%	≥0	int16	R
40B4H	16564	V3(V23) 16th Harmonic	THD=Rx/100	%	≥0	int16	R
40B5H	16565	V3(V23) 17th Harmonic	THD=Rx/100	%	≥0	int16	R
40B6H	16566	V3(V23) 18th Harmonic	THD=Rx/100	%	≥0	int16	R
40B7H	16567	V3(V23) 19th Harmonic	THD=Rx/100	%	≥0	int16	R
40B8H	16568	V3(V23) 20th Harmonic	THD=Rx/100	%	≥0	int16	R
40B9H	16569	V3(V23) 21st Harmonic	THD=Rx/100	%	≥0	int16	R
40BAH	16570	V3(V23) 22nd Harmonic	THD=Rx/100	%	≥0	int16	R
40BBH	16571	V3(V23) 23rd Harmonic	THD=Rx/100	%	≥0	int16	R
40BCH	16572	V3(V23) 24th Harmonic	THD=Rx/100	%	≥0	int16	R
40BDH	16573	V3(V23) 25th Harmonic	THD=Rx/100	%	≥0	int16	R
40BEH	16574	V3(V23) 26th Harmonic	THD=Rx/100	%	≥0	int16	R
40BFH	16575	V3(V23) 27th Harmonic	THD=Rx/100	%	≥0	int16	R
40C0H	16576	V3(V23) 28th Harmonic	THD=Rx/100	%	≥0	int16	R
40C1H	16577	V3(V23) 29th Harmonic	THD=Rx/100	%	≥0	int16	R
40C2H	16578	V3(V23) 30th Harmonic	THD=Rx/100	%	≥0	int16	R
40C3H	16579	V3(V23) 31st Harmonic	THD=Rx/100	%	≥0	int16	R
4540H	17728	V3(V23) 32nd Harmonic	THD=Rx/100	%	≥0	Word	R
4541H	17729	V3(V23) 33rd Harmonic	THD=Rx/100	%	≥0	Word	R
4542H	17730	V3(V23) 34th Harmonic	THD=Rx/100	%	≥0	Word	R
4543H	17731	V3(V23) 35th Harmonic	THD=Rx/100	%	≥0	Word	R
4544H	17732	V3(V23) 36th Harmonic	THD=Rx/100	%	≥0	Word	R
4545H	17733	V3(V23) 37th Harmonic	THD=Rx/100	%	≥0	Word	R
4546H	17734	V3(V23) 38th Harmonic	THD=Rx/100	%	≥0	Word	R
4547H	17735	V3(V23) 39th Harmonic	THD=Rx/100	%	≥0	Word	R
4548H	17736	V3(V23) 40th Harmonic	THD=Rx/100	%	≥0	Word	R
4549H	17737	V3(V23) 41st Harmonic	THD=Rx/100	%	≥0	Word	R
454AH	17738	V3(V23) 42nd Harmonic	THD=Rx/100	%	≥0	Word	R
454BH	17739	V3(V23) 43rd Harmonic	THD=Rx/100	%	≥0	Word	R
454CH	17740	V3(V23) 44th Harmonic	THD=Rx/100	%	≥0	Word	R
454DH	17741	V3(V23) 45th Harmonic	THD=Rx/100	%	≥0	Word	R
454EH	17742	V3(V23) 46th Harmonic	THD=Rx/100	%	≥0	Word	R
454FH	17743	V3(V23) 47th Harmonic	THD=Rx/100	%	≥0	Word	R
4550H	17744	V3(V23) 48th Harmonic	THD=Rx/100	%	≥0	Word	R
4551H	17745	V3(V23) 49th Harmonic	THD=Rx/100	%	≥0	Word	R
4552H	17746	V3(V23) 50th Harmonic	THD=Rx/100	%	≥0	Word	R
4553H	17747	V3(V23) 51st Harmonic	THD=Rx/100	%	≥0	Word	R
4554H	17748	V3(V23) 52nd Harmonic	THD=Rx/100	%	≥0	Word	R
4555H	17749	V3(V23) 53rd Harmonic	THD=Rx.100	%	≥0	Word	R
4556H	17750	V3(V23) 54th Harmonic	THD=Rx/100	%	≥0	Word	R
4557H	17751	V3(V23) 55th Harmonic	THD=Rx/100	%	≥0	Word	R
4558H	17752	V3(V23) 56th Harmonic	THD=Rx/100	%	≥0	Word	R
4559H	17753	V3(V23) 57th Harmonic	THD=Rx/100	%	≥0	Word	R

Voltage Harmonics, Even & Odd Harmonics, Crest Factor: 03H							
Address(H)	Address(D)	Parameter	Relationship	Proper-ty	Range	Data Type	Access Property
455AH	17754	V3(V23) 58th Harmonic	THD=Rx/100	%	≥0	Word	R
455BH	17755	V3(V23) 59th Harmonic	THD=Rx/100	%	≥0	Word	R
455CH	17756	V3(V23) 60th Harmonic	THD=Rx/100	%	≥0	Word	R
455DH	17757	V3(V23) 61st Harmonic	THD=Rx/100	%	≥0	Word	R
455EH	17758	V3(V23) 62nd Harmonic	THD=Rx/100	%	≥0	Word	R
455FH	17759	V3(V23) 63rd Harmonic	THD=Rx/100	%	≥0	Word	R
40C4H	16580	Odd THD_V3(V23)	THD=Rx/100	%	≥0	int16	R
40C5H	16581	Even THD_V3(V23)	THD=Rx/100	%	≥0	int16	R
40C6H	16582	Crest Factor V3(V23)	CF=Rx/100	%	0~65535	int16	R
40C7H	16583	THDD_V3(V23)	THFF=Rx/100	%	≥0	int16	R

I1 Current Harmonics

Table 6-31 I1 Current Harmonics Parameters

Current Harmonics, Even & Odd Harmonics, K Factor: 03H Read							
Address(H)	Address(D)	Parameter	Relationship	Proper-ty	Range	Data Type	Access Property
40C8H	16584	I1 2nd Harmonic	THD=Rx/100	%	≥0	int16	R
40C9H	16585	I1 3rd Harmonic	THD=Rx/100	%	≥0	int16	R
40CAH	16586	I1 4th Harmonic	THD=Rx/100	%	≥0	int16	R
40CBH	16587	I1 5th Harmonic	THD=Rx/100	%	≥0	int16	R
40CCH	16588	I1 6th Harmonic	THD=Rx/100	%	≥0	int16	R
40CDH	16589	I1 7th Harmonic	THD=Rx/100	%	≥0	int16	R
40CEH	16590	I1 8th Harmonic	THD=Rx/100	%	≥0	int16	R
40CFH	16591	I1 9th Harmonic	THD=Rx/100	%	≥0	int16	R
40D0H	16592	I1 10th Harmonic	THD=Rx/100	%	≥0	int16	R
40D1H	16593	I1 11th Harmonic	THD=Rx/100	%	≥0	int16	R
40D2H	16594	I1 12th Harmonic	THD=Rx/100	%	≥0	int16	R
40D3H	16595	I1 13th Harmonic	THD=Rx/100	%	≥0	int16	R
40D4H	16596	I1 14th Harmonic	THD=Rx/100	%	≥0	int16	R
40D5H	16597	I1 15th Harmonic	THD=Rx/100	%	≥0	int16	R
40D6H	16598	I1 16th Harmonic	THD=Rx/100	%	≥0	int16	R
40D7H	16599	I1 17th Harmonic	THD=Rx/100	%	≥0	int16	R
40D8H	16600	I1 18th Harmonic	THD=Rx/100	%	≥0	int16	R
40D9H	16601	I1 19th Harmonic	THD=Rx/100	%	≥0	int16	R
40DAH	16602	I1 20th Harmonic	THD=Rx/100	%	≥0	int16	R
40DBH	16603	I1 21st Harmonic	THD=Rx/100	%	≥0	int16	R
40DCH	16604	I1 22nd Harmonic	THD=Rx/100	%	≥0	int16	R
40DDH	16605	I1 23rd Harmonic	THD=Rx/100	%	≥0	int16	R
40DEH	16606	I1 24th Harmonic	THD=Rx/100	%	≥0	int16	R
40DFH	16607	I1 25th Harmonic	THD=Rx/100	%	≥0	int16	R
40E0H	16608	I1 26th Harmonic	THD=Rx/100	%	≥0	int16	R
40E1H	16609	I1 27th Harmonic	THD=Rx/100	%	≥0	int16	R
40E2H	16610	I1 28th Harmonic	THD=Rx/100	%	≥0	int16	R

Distributed by MicroDAQ, LLC
(603) 746-5524
www.microdaq.com

Current Harmonics, Even & Odd Harmonics, K Factor: 03H Read							
Address(H)	Address(D)	Parameter	Relationship	Proper-ty	Range	Data Type	Access Property
40E3H	16611	I1 29th Harmonic	THD=Rx/100	%	≥0	int16	R
40E4H	16612	I1 30th Harmonic	THD=Rx/100	%	≥0	int16	R
40E5H	16613	I1 31st Harmonic	THD=Rx/100	%	≥0	int16	R
4560H	17760	I1 32nd Harmonic	THD=Rx/100	%	≥0	Word	R
4561H	17762	I1 33rd Harmonic	THD=Rx/100	%	≥0	Word	R
4562H	17763	I1 34th Harmonic	THD=Rx/100	%	≥0	Word	R
4563H	17764	I1 35th Harmonic	THD=Rx/100	%	≥0	Word	R
4564H	17765	I1 36th Harmonic	THD=Rx/100	%	≥0	Word	R
4565H	17765	I1 37th Harmonic	THD=Rx/100	%	≥0	Word	R
4566H	17766	I1 38th Harmonic	THD=Rx/100	%	≥0	Word	R
4567H	17767	I1 39th Harmonic	THD=Rx/100	%	≥0	Word	R
4568H	17768	I1 40th Harmonic	THD=Rx/100	%	≥0	Word	R
4569H	17769	I1 41st Harmonic	THD=Rx/100	%	≥0	Word	R
456AH	17770	I1 42nd Harmonic	THD=Rx/100	%	≥0	Word	R
456BH	17771	I1 43rd Harmonic	THD=Rx/100	%	≥0	Word	R
456CH	17772	I1 44th Harmonic	THD=Rx/100	%	≥0	Word	R
456DH	17773	I1 45th Harmonic	THD=Rx/100	%	≥0	Word	R
456EH	17774	I1 46th Harmonic	THD=Rx/100	%	≥0	Word	R
456FH	17775	I1 47th Harmonic	THD=Rx/100	%	≥0	Word	R
4570H	17776	I1 48th Harmonic	THD=Rx/100	%	≥0	Word	R
4571H	17777	I1 49th Harmonic	THD=Rx/100	%	≥0	Word	R
4572H	17778	I1 50th Harmonic	THD=Rx/100	%	≥0	Word	R
4573H	17779	I1 51st Harmonic	THD=Rx/100	%	≥0	Word	R
4574H	17780	I1 52nd Harmonic	THD=Rx/100	%	≥0	Word	R
4575H	17781	I1 53rd Harmonic	THD=Rx/100	%	≥0	Word	R
4576H	17782	I1 54th Harmonic	THD=Rx/100	%	≥0	Word	R
4577H	17783	I1 55th Harmonic	THD=Rx/100	%	≥0	Word	R
4578H	17784	I1 56th Harmonic	THD=Rx/100	%	≥0	Word	R
4579H	17785	I1 57th Harmonic	THD=Rx/100	%	≥0	Word	R
457AH	17786	I1 58th Harmonic	THD=Rx/100	%	≥0	Word	R
457BH	17787	I1 59th Harmonic	THD=Rx/100	%	≥0	Word	R
457CH	17788	I1 60th Harmonic	THD=Rx/100	%	≥0	Word	R
457DH	17789	I1 61st Harmonic	THD=Rx/100	%	≥0	Word	R
457EH	17790	I1 62nd Harmonic	THD=Rx/100	%	≥0	Word	R
457FH	17791	I1 63rd Harmonic	THD=Rx/100	%	≥0	Word	R
40E6H	16614	Odd THD_I1	THD=Rx/100	%	≥0	int16	R
40E7H	16615	Even_THD_I1	THD=Rx/100	%	≥0	int16	R
40E8H	16616	K Factor of I1	CF=Rx/100	%	≥0	int16	R

Distributed by MicroDAQ, LLC
(603) 746-5524
www.microdaq.com

I2 Current Harmonics

Table 6-32 I2 Current Harmonics Parameters

Current Harmonics, Even & Odd Harmonics, K Factor: 03H Read							
Address(H)	Address(D)	Parameter	Relationship	Proper-ty	Range	Data Type	Access Property
40E9H	16617	I2 2nd Harmonic	THD=Rx/100	%	≥0	int16	R
40EAH	16618	I2 3rd Harmonic	THD=Rx/100	%	≥0	int16	R
40EBH	16619	I2 4th Harmonic	THD=Rx/100	%	≥0	int16	R
40ECH	16620	I2 5th Harmonic	THD=Rx/100	%	≥0	int16	R
40EDH	16621	I2 6th Harmonic	THD=Rx/100	%	≥0	int16	R
40EEH	16622	I2 7th Harmonic	THD=Rx/100	%	≥0	int16	R
40EFH	16623	I2 8th Harmonic	THD=Rx/100	%	≥0	int16	R
40F0H	16624	I2 9th Harmonic	THD=Rx/100	%	≥0	int16	R
40F1H	16625	I2 10th Harmonic	THD=Rx/100	%	≥0	int16	R
40F2H	16626	I2 11th Harmonic	THD=Rx/100	%	≥0	int16	R
40F3H	16627	I2 12th Harmonic	THD=Rx/100	%	≥0	int16	R
40F4H	16628	I2 13th Harmonic	THD=Rx/100	%	≥0	int16	R
40F5H	16629	I2 14th Harmonic	THD=Rx/100	%	≥0	int16	R
40F6H	16630	I2 15th Harmonic	THD=Rx/100	%	≥0	int16	R
40F7H	16631	I2 16th Harmonic	THD=Rx/100	%	≥0	int16	R
40F8H	16632	I2 17th Harmonic	THD=Rx/100	%	≥0	int16	R
40F9H	16633	I2 18th Harmonic	THD=Rx/100	%	≥0	int16	R
40FAH	16634	I2 19th Harmonic	THD=Rx/100	%	≥0	int16	R
40FBH	16635	I2 20th Harmonic	THD=Rx/100	%	≥0	int16	R
40FCH	16636	I2 21st Harmonic	THD=Rx/100	%	≥0	int16	R
40FDH	16637	I2 22nd Harmonic	THD=Rx/100	%	≥0	int16	R
40FEH	16638	I2 23rd Harmonic	THD=Rx/100	%	≥0	int16	R
40FFH	16639	I2 24th Harmonic	THD=Rx/100	%	≥0	int16	R
4100H	16640	I2 25th Harmonic	THD=Rx/100	%	≥0	int16	R
4101H	16641	I2 26th Harmonic	THD=Rx/100	%	≥0	int16	R
4102H	16642	I2 27th Harmonic	THD=Rx/100	%	≥0	int16	R
4103H	16643	I2 28th Harmonic	THD=Rx/100	%	≥0	int16	R
4104H	16644	I2 29th Harmonic	THD=Rx/100	%	≥0	int16	R
4105H	16645	I2 30th Harmonic	THD=Rx/100	%	≥0	int16	R
4106H	16646	I2 31st Harmonic	THD=Rx/100	%	≥0	int16	R
4580H	17792	I2 32nd Harmonic	THD=Rx/100	%	≥0	Word	R
4581H	17793	I2 33rd Harmonic	THD=Rx/100	%	≥0	Word	R
4582H	17794	I2 34th Harmonic	THD=Rx/100	%	≥0	Word	R
4583H	17795	I2 35th Harmonic	THD=Rx/100	%	≥0	Word	R
4584H	17796	I2 36th Harmonic	THD=Rx/100	%	≥0	Word	R
4585H	17797	I2 37th Harmonic	THD=Rx/100	%	≥0	Word	R
4586H	17798	I2 38th Harmonic	THD=Rx/100	%	≥0	Word	R
4587H	17799	I2 39th Harmonic	THD=Rx/100	%	≥0	Word	R
4588H	17800	I2 40th Harmonic	THD=Rx/100	%	≥0	Word	R
4589H	17801	I2 41st Harmonic	THD=Rx/100	%	≥0	Word	R
458AH	17802	I2 42nd Harmonic	THD=Rx/100	%	≥0	Word	R

Distributed by MicroDAQ, LLC
(603) 746-5524
www.microdaq.com

Current Harmonics, Even & Odd Harmonics, K Factor: 03H Read							
Address(H)	Address(D)	Parameter	Relationship	Proper-ty	Range	Data Type	Access Property
458BH	17803	I2 43rd Harmonic	THD=Rx/100	%	≥0	Word	R
458CH	17804	I2 44th Harmonic	THD=Rx/100	%	≥0	Word	R
458DH	17805	I2 45th Harmonic	THD=Rx/100	%	≥0	Word	R
458EH	17806	I2 46th Harmonic	THD=Rx/100	%	≥0	Word	R
458FH	17807	I2 47th Harmonic	THD=Rx/100	%	≥0	Word	R
4590H	17808	I2 48th Harmonic	THD=Rx/100	%	≥0	Word	R
4591H	17809	I2 49th Harmonic	THD=Rx/100	%	≥0	Word	R
4592H	17810	I2 50th Harmonic	THD=Rx/100	%	≥0	Word	R
4593H	17811	I2 51st Harmonic	THD=Rx/100	%	≥0	Word	R
4594H	17812	I2 52nd Harmonic	THD=Rx/100	%	≥0	Word	R
4595H	17813	I2 53rd Harmonic	THD=Rx/100	%	≥0	Word	R
4596H	17814	I2 54th Harmonic	THD=Rx/100	%	≥0	Word	R
4597H	17815	I2 55th Harmonic	THD=Rx/100	%	≥0	Word	R
4598H	17816	I2 56th Harmonic	THD=Rx/100	%	≥0	Word	R
4599H	17817	I2 57th Harmonic	THD=Rx/100	%	≥0	Word	R
459AH	17818	I2 58th Harmonic	THD=Rx/100	%	≥0	Word	R
459BH	17819	I2 59th Harmonic	THD=Rx/100	%	≥0	Word	R
459CH	17820	I2 60th Harmonic	THD=Rx/100	%	≥0	Word	R
459DH	17821	I2 61st Harmonic	THD=Rx/100	%	≥0	Word	R
459EH	17822	I2 62nd Harmonic	THD=Rx/100	%	≥0	Word	R
459FH	17823	I2 63rd Harmonic	THD=Rx/100	%	≥0	Word	R
4107H	16647	Odd THD_I2	THD=Rx/100	%	≥0	int16	R
4108H	16648	Even THD_I2	THD=Rx/100	%	≥0	int16	R
4109H	16649	K Factor of I2	CF=Rx/100	%	≥0	int16	R

I3 Current Harmonics

Table 6-33 I3 Current Harmonics Parameters

Current Harmonics, Even & Odd Harmonics, K Factor: 03H Read							
Address(H)	Address(D)	Parameter	Relationship	Property	Range	Data Type	Access Property
410AH	16650	I3 2nd Harmonic	THD=Rx/100	%	≥0	int16	R
410BH	16651	I3 3rd Harmonic	THD=Rx/100	%	≥0	int16	R
410CH	16652	I3 4th Harmonic	THD=Rx/100	%	≥0	int16	R
410DH	16653	I3 5th Harmonic	THD=Rx/100	%	≥0	int16	R
410EH	16654	I3 6th Harmonic	THD=Rx/100	%	≥0	int16	R
410FH	16655	I3 7th Harmonic	THD=Rx/100	%	≥0	int16	R
4110H	16656	I3 8th Harmonic	THD=Rx/100	%	≥0	int16	R
4111H	16657	I3 9th Harmonic	THD=Rx/100	%	≥0	int16	R
4112H	16658	I3 10th Harmonic	THD=Rx/100	%	≥0	int16	R
4113H	16659	I3 11th Harmonic	THD=Rx/100	%	≥0	int16	R
4114H	16660	I3 12th Harmonic	THD=Rx/100	%	≥0	int16	R
4115H	16661	I3 13th Harmonic	THD=Rx/100	%	≥0	int16	R
4116H	16662	I3 14th Harmonic	THD=Rx/100	%	≥0	int16	R

Current Harmonics, Even & Odd Harmonics, K Factor: 03H Read							
Address(H)	Address(D)	Parameter	Relationship	Property	Range	Data Type	Access Property
4117H	16663	I3 15th Harmonic	THD=Rx/100	%	≥0	int16	R
4118H	16664	I3 16th Harmonic	THD=Rx/100	%	≥0	int16	R
4119H	16665	I3 17th Harmonic	THD=Rx/100	%	≥0	int16	R
411AH	16666	I3 18th Harmonic	THD=Rx/100	%	≥0	int16	R
411BH	16667	I3 19th Harmonic	THD=Rx/100	%	≥0	int16	R
411CH	16668	I3 20th Harmonic	THD=Rx/100	%	≥0	int16	R
411DH	16669	I3 21st Harmonic	THD=Rx/100	%	≥0	int16	R
411EH	16670	I3 22nd Harmonic	THD=Rx/100	%	≥0	int16	R
411FH	16671	I3 23rd Harmonic	THD=Rx/100	%	≥0	int16	R
4120H	16672	I3 24th Harmonic	THD=Rx/100	%	≥0	int16	R
4121H	16673	I3 25th Harmonic	THD=Rx/100	%	≥0	int16	R
4122H	16674	I3 26th Harmonic	THD=Rx/100	%	≥0	int16	R
4123H	16675	I3 27th Harmonic	THD=Rx/100	%	≥0	int16	R
4124H	16676	I3 28th Harmonic	THD=Rx/100	%	≥0	int16	R
4125H	16677	I3 29th Harmonic	THD=Rx/100	%	≥0	int16	R
4126H	16678	I3 30th Harmonic	THD=Rx/100	%	≥0	int16	R
4127H	16679	I3 31st Harmonic	THD=Rx/100	%	≥0	int16	R
45A0H	17824	I3 32nd Harmonic	THD=Rx/100	%	≥0	Word	R
45A1H	17825	I3 33rd Harmonic	THD=Rx/100	%	≥0	Word	R
45A2H	17826	I3 34th Harmonic	THD=Rx/100	%	≥0	Word	R
45A3H	17827	I3 35th Harmonic	THD=Rx/100	%	≥0	Word	R
45A4H	17828	I3 36th Harmonic	THD=Rx/100	%	≥0	Word	R
45A5H	17829	I3 37th Harmonic	THD=Rx/100	%	≥0	Word	R
45A6H	17830	I3 38th Harmonic	THD=Rx/100	%	≥0	Word	R
45A7H	17831	I3 39th Harmonic	THD=Rx/100	%	≥0	Word	R
45A8H	17832	I3 40th Harmonic	THD=Rx/100	%	≥0	Word	R
45A9H	17833	I3 41st Harmonic	THD=Rx/100	%	≥0	Word	R
45AAH	17834	I3 42nd Harmonic	THD=Rx/100	%	≥0	Word	R
45ABH	17835	I3 43rd Harmonic	THD=Rx/100	%	≥0	Word	R
45ACH	17836	I3 44th Harmonic	THD=Rx/100	%	≥0	Word	R
45ADH	17837	I3 45th Harmonic	THD=Rx/100	%	≥0	Word	R
45AEH	17838	I3 46th Harmonic	THD=Rx/100	%	≥0	Word	R
45AFH	17839	I3 47th Harmonic	THD=Rx/100	%	≥0	Word	R
45B0H	17840	I3 48th Harmonic	THD=Rx/100	%	≥0	Word	R
45B1H	17841	I3 49th Harmonic	THD=Rx/100	%	≥0	Word	R
45B2H	17842	I3 50th Harmonic	THD=Rx/100	%	≥0	Word	R
45B3H	17843	I3 51st Harmonic	THD=Rx/100	%	≥0	Word	R
45B4H	17844	I3 52nd Harmonic	THD=Rx/100	%	≥0	Word	R
45B5H	17845	I3 53rd Harmonic	THD=Rx/100	%	≥0	Word	R
45B6H	17846	I3 54th Harmonic	THD=Rx/100	%	≥0	Word	R
45B7H	17847	I3 55th Harmonic	THD=Rx/100	%	≥0	Word	R
45B8H	17848	I3 56th Harmonic	THD=Rx/100	%	≥0	Word	R
45B9H	17849	I3 57th Harmonic	THD=Rx/100	%	≥0	Word	R
45BAH	17850	I3 58th Harmonic	THD=Rx/100	%	≥0	Word	R

Distributed by MicroDAQ, LLC
(603) 746-5524
www.microdaq.com

Current Harmonics, Even & Odd Harmonics, K Factor: 03H Read							
Address(H)	Address(D)	Parameter	Relationship	Property	Range	Data Type	Access Property
45BBH	17851	I3 59th Harmonic	THD=Rx/100	%	≥0	Word	R
45BCH	17852	I3 60th Harmonic	THD=Rx/100	%	≥0	Word	R
45BDH	17853	I3 61st Harmonic	THD=Rx/100	%	≥0	Word	R
45BEH	17854	I3 62nd Harmonic	THD=Rx/100	%	≥0	Word	R
45BFH	17855	I3 63rd Harmonic	THD=Rx/100	%	≥0	Word	R
4128H	16680	Odd THD_I3	THD=Rx/100	%	≥0	int16	R
4129H	16681	Even THD_I3	THD=Rx/100	%	≥0	int16	R
412AH	16682	K Factor of I3	CF=Rx/100	%	≥0	int16	R

6.3.11 Max & Min Values

Records MAX/MIN value of the parameters and their corresponding timestamps.

Maximum Values

Table 6-34 Maximum Value Parameters

MAX: 03H Read							
Address(H)	Address(D)	Parameter	Relationship	Property	Range	Data Type	Access Property
4136H	16694	Max of V1	(Rx*(PT1/PT2))/10	V	-32768~32767	int	R
4137H-413CH	16695-16700	Timestamp	YYYY:MM:DD:hh:mm:ss			int	R
413DH	16701	Max of V2	(Rx*(PT1/PT2))/10	V	-32768~32767	int	R
413EH-4143H	16702-16707	Timestamp	YYYY:MM:DD:hh:mm:ss			int	R
4144H	16708	Max of V3	(Rx*(PT1/PT2))/10	V	-32768~32767	int	R
4145H-414AH	16709-16714	Timestamp	YYYY:MM:DD:hh:mm:ss			int	R
414BH	16715	Max of V12	(Rx*(PT1/PT2))/10	V	-32768~32767	int	R
414CH-4151H	16716-16721	Timestamp	YYYY:MM:DD:hh:mm:ss			int	R
4152H	16722	Max of V23	(Rx*(PT1/PT2))/10	V	-32768~32767	int	R
4153H-4158H	16723-16728	Timestamp	YYYY:MM:DD:hh:mm:ss			int	R
4159H	16729	Max of V31	(Rx*(PT1/PT2))/10	V	-32768~32767	int	R
415AH-415FH	16730-16735	Timestamp	YYYY:MM:DD:hh:mm:ss			int	R
4160H	16736	Max of I1	(Rx*(CT1/CT2))/1000	A	-32768~32767	int	R
4161H-4166H	16737-16742	Timestamp	YYYY:MM:DD:hh:mm:ss			int	R
4167H	16743	Max of I2	(Rx*(CT1/CT2))/1000	A	-32768~32767	int	R
4168H-416DH	16744-16749	Timestamp	YYYY:MM:DD:hh:mm:ss			int	R
416EH	16750	Max of I3	(Rx*(CT1/CT2))/1000	A	-32768~32767	int	R
416FH-4174H	16751-16756	Timestamp	YYYY:MM:DD:hh:mm:ss			int	R
4175H	16757	Max of System Power	(Rx*(CT1/CT2)*(PT1/PT2))/1000	kW	-32768~32767	int	R
4176H-417BH	16758-16763	Timestamp	YYYY:MM:DD:hh:mm:ss			int	R
417CH	16764	Max of Reactive Power	(Rx*(CT1/CT2)*(PT1/PT2))/1000	kvar	-32768~32767	int	R
417DH-4182H	16765-16770	Timestamp	YYYY:MM:DD:hh:mm:ss			int	R
4183H	16771	Max of Apparent Power	(Rx*(CT1/CT2)*(PT1/PT2))/1000	kVA	-32768~32767	int	R
4184H-4189H	16772-16777	Timestamp	YYYY:MM:DD:hh:mm:ss			int	R
418AH	16778	Max of Power Factor	Rx/1000		-32768~32767	int	R

MAX: 03H Read							
Address(H)	**Address(D)**	**Parameter**	**Relationship**	**Property**	**Range**	**Data Type**	**Access Property**
418BH-4190H	16779-16784	Timestamp	YYYY:MM:DD:hh:mm:ss			int	R
4191H	16785	Max of Frequency	Rx/1000	Hz	-32768~32767	int	R
4192H-4197H	16786-16791	Timestamp	YYYY:MM:DD:hh:mm:ss			int	R
4198H	16792	Max of Power Demand	(Rx*(CT1/CT2)*(PT1/PT2))/1000	kW	-32768~32767	int	R
4199H-419EH	16793-16798	Timestamp	YYYY:MM:DD:hh:mm:ss			int	R
419FH	16799	Max of Reactive Power Demand	(Rx*(CT1/CT2)*(PT1/PT2))/1000	kvar	-32768~32767	int	R
41A0H-41A5H	16800-16805	Timestamp	YYYY:MM:DD:hh:mm:ss			int	R
41A6H	16806	Max of Apparent Power Demand	(Rx*(CT1/CT2)*(PT1/PT2))/1000	kVA	-32768~32767	int	R
41A7H-41ACH	16807-16812	Timestamp	YYYY:MM:DD:hh:mm:ss			int	R
4606H	17926	Max of Phase A Current Demand	(Rx*(CT1/CT2))/1000	A	-32768~32767	int	R
4607H-460CH	17927-17932	Timestamp	YYYY:MM:DD:hh:mm:ss			int	R
460DH	17933	Max of Phase B Current Demand	(Rx*(CT1/CT2))/1000	A	-32768~32767	int	R
460EH-4613H	17934-17939	Timestamp	YYYY:MM:DD:hh:mm:ss			int	R
4614H	17940	Max of Phase C Current Demand	(Rx*(CT1/CT2))/1000	A	-32768~32767	int	R
4615H-461AH	17941-17946	Timestamp	YYYY:MM:DD:hh:mm:ss			int	R
41ADH	16813	Max of Voltage Unbalance	Rx/10	%	-32768~32767	int	R
41AEH-41B3H	16814-16819	Timestamp	YYYY:MM:DD:hh:mm:ss			int	R
41B4H	16820	Max of Current Unbalance	Rx/10	%	-32768~32767	int	R
41B5H-41BAH	16821-16826	Timestamp	YYYY:MM:DD:hh:mm:ss			int	R
41BBH	16827	Max of THD_V1(V12)		%	-32768~32767	int	R
41BCH-41C1H	16828-16833	Timestamp	YYYY:MM:DD:hh:mm:ss			int	R
41C2H	16834	Max of THD_V2(V31)	Rx/100	%	-32768~32767	int	R
41C3H-41C8H	16835-16840	Timestamp	YYYY:MM:DD:hh:mm:ss			int	R
41C9H	16841	Max of THD_V3(V23)	Rx/100	%	-32768~32767	int	R
41CAH-41CFH	16842-16847	Timestamp	YYYY:MM:DD:hh:mm:ss			int	R
41D0H	16848	Max of THD_I1	Rx/100	%	-32768~32767	int	R
41D1H-41D6H	16849-16854	Timestamp	YYYY:MM:DD:hh:mm:ss			int	R
41D7H	16855	Max of THD_I2	Rx/100	%	-32768~32767	int	R
41D8H-41DDH	16856-16861	Timestamp	YYYY:MM:DD:hh:mm:ss			int	R
41DEH	16862	Max of THD_I3	Rx/100	%	-32768~32767	int	R
41DFH-41E4H	16863-16868	Timestamp	YYYY:MM:DD:hh:mm:ss			int	R

Minimum Values

Table 6-35 Minimum Value Parameters

MIN: 03H Read							
Address(H)	**Address(D)**	**Parameter**	**Relationship**	**Property**	**Range**	**Data Type**	**Access Property**
41E5H	16869	Min of V1	(Rx*(PT1/PT2))/10	V	-32768~32767	int	R
41E6H-41EBH	16870-16875	Timestamp	YYYY:MM:DD:hh:mm:ss			int	R
41ECH	16876	Min of V2	(Rx*(PT1/PT2))/10	V	-32768~32767	int	R
41EDH-41F2H	16877-16882	Timestamp	YYYY:MM:DD:hh:mm:ss			int	R

Distributed by MicroDAQ, LLC
(603) 746-5524
www.microdaq.com

MIN: 03H Read							
Address(H)	**Address(D)**	**Parameter**	**Relationship**	**Property**	**Range**	**Data Type**	**Access Property**
41F3H	16883	Min of V3	(Rx*(PT1/PT2))/10	V	-32768~32767	int	R
41F4H-41F9H	16884-16889	Timestamp	YYYY:MM:DD:hh:mm:ss			int	R
41FAH	16890	Min of V12	(Rx*(PT1/PT2))/10	V	-32768~32767	int	R
41FBH-4200H	16891-16896	Timestamp	YYYY:MM:DD:hh:mm:ss			int	R
4201H	16897	Min of V23	(Rx*(PT1/PT2))/10	V	-32768~32767	int	R
4202H-4207H	16898-16903	Timestamp	YYYY:MM:DD:hh:mm:ss			int	R
4208H	16904	Min of V31	(Rx*(PT1/PT2))/10	V	-32768~32767	int	R
4209H-420EH	16905-16910	Timestamp	YYYY:MM:DD:hh:mm:ss			int	R
420FH	16911	Min of I1	(Rx*(CT1/CT2))/1000	A	-32768~32767	int	R
4210H-4215H	16912-16917	Timestamp	YYYY:MM:DD:hh:mm:ss			int	R
4216H	16918	Min of I2	(Rx*(CT1/CT2))/1000	A	-32768~32767	int	R
4217H-421CH	16919-16924	Timestamp	YYYY:MM:DD:hh:mm:ss			int	R
421DH	16925	Min of I3	(Rx*(CT1/CT2))/1000	A	-32768~32767	int	R
421EH-4223H	16926-16931	Timestamp	YYYY:MM:DD:hh:mm:ss			int	R
4224H	16932	Min of System Power	(Rx*(CT1/CT2)*(PT1/PT2))/1000	kW	-32768~32767	int	R
4225H-422AH	16933-16938	Timestamp	YYYY:MM:DD:hh:mm:ss			int	R
422BH	16939	Min of Reactive Power	(Rx*(CT1/CT2)*(PT1/PT2))/1000	kvar	-32768~32767	int	R
422CH-4231H	16940-16945	Timestamp	YYYY:MM:DD:hh:mm:ss			int	R
4232H	16946	Max of Apparent Power	(Rx*(CT1/CT2)*(PT1/PT2))/1000	kVA	-32768~32767	int	R
4233H-4238H	16947-16952	Timestamp	YYYY:MM:DD:hh:mm:ss			int	R
4239H	16953	Min of Power Factor	Rx/1000		-32768~32767	int	R
423AH-423FH	16954-16959	Timestamp	YYYY:MM:DD:hh:mm:ss			int	R
4240H	16960	Max of Frequency	Rx/1000	Hz	-32768~32767	int	R
4241H-4246H	16961-16966	Timestamp	YYYY:MM:DD:hh:mm:ss			int	R
4247H	16967	Min of Power Demand	(Rx*(CT1/CT2)*(PT1/PT2))/1000	kW	-32768~32767	int	R
4248H-424DH	16968-16973	Timestamp	YYYY:MM:DD:hh:mm:ss			int	R
424EH	16974	Max of Reactive Power Demand	(Rx*(CT1/CT2)*(PT1/PT2))/1000	kvar	-32768~32767	int	R
424FH-4254H	16975-16980	Timestamp	YYYY:MM:DD:hh:mm:ss			int	R
4255H	16981	Max of Apparent Power Demand	(Rx*(CT1/CT2)*(PT1/PT2))/1000	kVA	-32768~32767	int	R
4256H-425BH	16982-16987	Timestamp	YYYY:MM:DD:hh:mm:ss			int	R
425CH	16988	Min of Voltage Unbalance	Rx/10	%	-32768~32767	int	R
425DH-4262H	16989-16994	Timestamp	YYYY:MM:DD:hh:mm:ss			int	R
4263H	16995	Min of Current Unbalance	Rx/10	%	-32768~32767	int	R
4264H-4269H	16996-17001	Timestamp	YYYY:MM:DD:hh:mm:ss			int	R
426AH	17002	Min of THD_V1 (V12)	Rx/100	%	-32768~32767	int	R
426BH-4270H	17003-17008	Timestamp	YYYY:MM:DD:hh:mm:ss			int	R
4271H	17009	Min of THD_V2 (V31)	Rx/100	%	-32768~32767	int	R
4272H-4277H	17010-17015	Timestamp	YYYY:MM:DD:hh:mm:ss			int	R
4278H	17016	Min of THD_V3(V23)	Rx/100	%	-32768~32767	int	R
4279H-427EH	17017-17022	Timestamp	YYYY:MM:DD:hh:mm:ss			int	R
427FH	17023	Min of THD_I1	Rx/100	%	-32768~32767	int	R

Distributed by MicroDAQ, LLC
(603) 746-5524
www.microdaq.com

MIN: 03H Read							
Address(H)	Address(D)	Parameter	Relationship	Property	Range	Data Type	Access Property
4280H-4285H	17024-17029	Timestamp	YYYY:MM:DD:hh:mm:ss			int	R
4286H	17030	Min of THD_I2	Rx/100	%	-32768~32767	int	R
4287H-428CH	17031-17036	Timestamp	YYYY:MM:DD:hh:mm:ss			int	R
428DH	17037	Min of THD_I3	Rx/100	%	-32768~32767	int	R
428EH-4293H	17038-17043	Timestamp	YYYY:MM:DD:hh:mm:ss			int	R

NOTE: The MAX and MIN frequency value should use word data type (0~65535).

6.3.12 Phase Angles

All voltage and current phase angles corresponding to V1 (V12) are stored here. You can find out the phase sequence according to them. Data type is "Word".

Table 6-36 Phase Angles

Phase Angles: 03H Read						
Address(H)	Address(D)	Parameter	Relationship	Range	Data Type	Access Property
42A0H	17056	Phase Angle of V2 to V1	V2=Rx/10	0~3600	Word	R
42A1H	17057	Phase Angle of V3 to V1	V3=Rx/10	0~3600	Word	R
42A2H	17058	Phase Angle of I1 to V1	I1=Rx/10	0~3600	Word	R
42A3H	17059	Phase Angle of I2 to V1	I2=Rx/10	0~3600	Word	R
42A4H	17060	Phase Angle of I3 to V1	I3=Rx/10	0~3600	Word	R

6.3.13 Sequence Component

The measured voltage V1 (V12) and current I1 consist of both real and imaginary parts. They have positive sequence, negative sequence and zero sequence.

Table 6-37 Sequence Component Parameters

Sequence Component: 03H Read							
Address(H)	Address(D)	Parameter	Relation-ship	Proper-ty	Range	Data Type	Access Prop-erty
4294H	17044	Real Part of Voltage Positive Sequence	THD=Rx/100	%	-32768~32768	int16	R
4295H	17045	Imaginary Part of Voltage Positive Sequence	THD=Rx/100	%	-32768~32768	int16	R
4296H	17046	Real Part of Voltage Negative Sequence	THD=Rx/100	%	-32768~32768	int16	R
4297H	17047	Imaginary Part of Voltage Negative Sequence	THD=Rx/100	%	-32768~32768	int16	R
4298H	17048	Real Part of Voltage Zero Sequence	THD=Rx/100	%	-32768~32768	int16	R
4299H	17049	Imaginary Part of Voltage Zero Sequence	THD=Rx/100	%	-32768~32768	int16	R
429AH	17050	Real Part of Current Positive Sequence	THD=Rx/100	%	-32768~32768	int16	R

Distributed by MicroDAQ, LLC
(603) 746-5524
www.microdaq.com

Sequence Component: 03H Read							
Address(H)	Address(D)	Parameter	Relation-ship	Proper-ty	Range	Data Type	Access Prop-erty
429BH	17051	Imaginary Part of Current Positive Sequence	THD=Rx/100	%	-32768~32768	int16	R
429CH	17052	Real Part of Current Negative Sequence	THD=Rx/100	%	-32768~32768	int16	R
429DH	17053	Imaginary Part of Current Negative Sequence	THD=Rx/100	%	-32768~32768	int16	R
429EH	17054	Real Part of Current Zero Sequence	THD=Rx/100	%	-32768~32768	int16	R
29FH	17055	Imaginary Part of Current Zero Sequence	THD=Rx/100	%	-32768~32768	int16	R

6.3.14 I/O Module Settings

Changes to I/O module settings will only take effect if the corresponding I/O modules are installed; otherwise, no changes will be made. Please ensure to check the I/O module connection status prior to making any adjustments. Function code: 03H for reading, 10H for writing. Please refer to Chapter 5 Extended Modules for detail.

AXM-IO11

Table 6-38 I/O Module Settings for AXM-IO11

AXM-IO1-1 Settings: 03H Read, 10H Write					
Address	Parameters	Default	Range	Data Type	Property
109EH	DI1~6 type	0	Bit0: DI1 Bit1: DI2 Bit2: DI3 Bit3: DI4Bit4: DI5 Bit5: DI6 0: Status Monitor 1: Pulse Counter	Word	R/W
109FH	DI pulse constant	1	1~65535	Word	R/W
10A0H	RO Type Mode (Relay 1 and 2)	0	0: Relay 1: Alarm	Word	R/W
10A1H	RO Control Mode (Relay 1 and 2)	0	0: Latch 1: Momentary 2: Manual	Word	R/W
10A2H	RO Pulse width	50	Relay Mode: 50~3000 Alarm Mode: 300~3000	Word	R/W

AXM-IO21

Table 6-39 I/O Module Settings for AXM-IO21

AXM-IO2-1 Settings, 10H Write					
Address	**Parameters**	**Default**	**Range**	**Data Type**	**Property**
10A3H	DI7~10 type	0	Bit0: DI7 Bit1: DI8 Bit2: DI9 Bit3: DI10 0: Status Monitor 1: Pulse Counter	Word	R/W
10A4H	DI pulse constant	1	1~65535	Word	R/W
10A5H	DO Mode (Relay 3 and 4)	0	0: Energy Pulse Output 1: Alarming Output	Word	R/W
10A6H	DO Pulse Width (Relay 3 and 4)	80	20~1000ms	Word	R/W
10A7H	DO1 Parameter Selection	0	0: None 1: Import Active Power (EP_IMP) 2: Export Active Power (EP_EXP) 3: Import Reactive Power (EQ_IMP) 4: Export Reactive Power (EQ_EXP)	Word	R/W
10A8H	DO2 Parameter Selection	0	0: None 1: Import Active Power (EP_IMP) 2: Export Active Power (EP_EXP) 3: Import Reactive Power (EQ_IMP) 4: Export Reactive Power (EQ_EXP)	Word	R/W
10A9H	AO Type (AO 1 and 2)	1	0: 0~20mA 1: 4~20mA 2: 0~5V 3: 1~5V	Word	R/W

AXM-IO31

Table 6-40 I/O Module Settings for AXM-IO31

AXM-IO3-1 Settings: 03H Read, 10H Write					
Address	**Parameters**	**Default**	**Range**	**Data Type**	**Property**
10AAH	DI11~14 type	0	Bit0: DI11 Bit1: DI12 Bit2: DI13 Bit3: DI14 0: Status Monitor 1: Pulse Counter	Word	R/W
10ABH	DI pulse constant	1	1~65535	Word	R/W

Distributed by MicroDAQ, LLC
(603) 746-5524
www.microdaq.com

AXM-IO3-1 Settings: 03H Read, 10H Write					
Address	**Parameters**	**Default**	**Range**	**Data Type**	**Property**
10ACH	RO Type Mode (Relay 3 and 4)	0	0: Relay 1: Alarm	Word	R/W
10ADH	RO Control Mode (Relay 3 and 4)	0	0: Latch 1: Momentary 2: Manual	Word	R/W
10AEH	RO Pulse width	50	Relay Mode: 50~3000 Alarm Mode: 300~3000	Word	R/W
10AFH	AI Type (AI 1 and 2)	1	0: 0~20mA 1: 4~20mA 2: 0~5V 3: 1~5V	Word	R/W

AXM-IO12

Table 6-41 I/O Module Settings for AXM-IO12

AXM-IO1-2 Settings: 03H Read, 10H Write					
Address	**Parameters**	**Default**	**Range**	**Data Type**	**Property**
10B0H	DI15~20 type	0	Bit0: DI15 Bit1: DI16 Bit2: DI17 Bit3: DI18 Bit4: DI19 Bit5: DI20 0: Status Monitor 1: Pulse Counter	Word	R/W
10B1H	DI pulse constant	0	1~65535	Word	R/W
10B2H	RO Type Mode (Relay 5 and 6)	0	0: Relay 1: Alarm	Word	R/W
10B3H	RO Control Mode (Relay 5 and 6)	0	0: Latch 1: Momentary 2: Manual	Word	R/W
10B4H	RO Pulse width	50	Relay Mode: 50~3000 Alarm Mode: 300~3000	Word	R/W

AXM-IO22

Table 6-42 I/O Module Settings for AXM-IO22

AXM-IO2-2 Settings: 03H Read, 10H Write					
Address	**Parameters**	**Default**	**Range**	**Data Type**	**Property**
10B5H	DI21~24 type	0	Bit0: DI21 Bit1: DI22 Bit2: DI23 Bit3: DI24 0: Status Monitor 1: Pulse Counter	Word	R/W
10B6H	DI pulse constant	1	1~65535	Word	R/W
10B7H	DO Mode (DO 3 and 4)	0	0: Energy Pulse Output 1: Alarming Output	Word	R/W
10B8H	DO pulse width	80	20~1000ms	Word	R/W
10B9H	DO3 Parameter Selection	0	0: None 1: Import Active Power (EP_IMP) 2: Export Active Power (EP_EXP) 3: Import Reactive Power (EQ_IMP) 4: Export Reactive Power (EQ_EXP)	Word	R/W
10BAH	DO4 Parameter Selection	0	0: None 1: Import Active Power (EP_IMP) 2: Export Active Power (EP_EXP) 3: Import Reactive Power (EQ_IMP) 4: Export Reactive Power (EQ_EXP)	Word	R/W
10BBH	AO Type (AO 3 and 4)	1	0: 0~20mA 1: 4~20mA 2: 0~5V 3: 1~5V	Word	R/W

AXM-IO32

Table 6-43 I/O Module Settings for AXM-IO32

AXM-IO3-2 Settings: 03H Read, 10H Write					
Address	**Parameters**	**Default**	**Range**	**Data Type**	**Property**
10BCH	DI25~28 type	0	Bit0: DI25 Bit1: DI26 Bit2: DI27 Bit3: DI28 0: Status Monitor 1: Pulse Counter	Word	R/W
10BDH	DI pulse constant	1	1~65535	Word	R/W
10BEH	RO Type Mode (Relay 7 and 8)	0	0: Relay 1: Alarm	Word	R/W

Distributed by MicroDAQ, LLC
(603) 746-5524
www.microdaq.com

AXM-IO3-2 Settings: 03H Read, 10H Write					
Address	**Parameters**	**Default**	**Range**	**Data Type**	**Property**
10BFH	RO Control Mode (Relay 7 and 8)	0	0: Latch 1: Momentary 2: Manual	Word	R/W
10C0H	RO Pulse width	50	Relay Mode: 50~3000 Alarm Mode: 300~3000	Word	R/W
10C1H	AI Type (AI 3 and 4)	1	0: 0~20mA 1: 4~20mA 2: 0~5V 3: 1~5V	Word	R/W

AO Parameter Selection

Table 6-44 AO Parameter Selection

AO Parameter Selection: 03H Read, 10H Write					
Address	**Parameters**	**Default**	**Range**	**Data Type**	**Property**
10C2H	AO1 parameter	9	Refer to the table 6-45 below	Word	R/W
10C3H	AO2 parameter	9	Refer to the table 6-45 below	Word	R/W
10C4H	AO3 parameter	9	Refer to the table 6-45 below	Word	R/W
10C5H	AO4 parameter	9	Refer to the table 6-45 below	Word	R/W

AO Parameter Translation Table

Table 6-45 AO Parameters

AO Parameter Selection					
Setting Value	**Transforming Object**	**Setting Value**	**Transforming Object**	**Setting Value**	**Transforming Object**
0	Frequency	1	Va	2	Vb
3	Vc	4	Average phase voltage	5	Vab
6	Vbc	7	Vca	8	Average line voltage
9	Current of phase A	10	Current of phase B	11	Current of phase C
12	Average current	13	Neutral current	14	Power of phase A
15	Power of phase B	16	Power of phase C	17	Power of all
18	Reactive power of A	19	Reactive power of phase B	20	Reactive power of phase C
21	Reactive power of all	22	Apparent power of phase A	23	Apparent power of phase B
24	Apparent power of phase C	25	Apparent power of all	26	PF of A
27	PF of B	28	PF of C	29	PF

AO Range Configuration

Table 6-46 AO Range Configuration

AO Parameter Selection: 03H Read, 10H Write					
Address	**Parameters**	**Default**	**Range**	**Data Type**	**Property**
10D0H	AO1 Slope Number selection for input/output transfer curve	1	1: Single Slope 2: Dual Slope 3: Triple Slope	INT	R/W
10D1H	AO1 setpoint 1 parameter value	0	Please see note	INT	R/W
10D2H	AO1 setpoint 2 parameter value	0		INT	R/W
10D3H	AO1 setpoint 3 parameter value	0		INT	R/W
10D4H	AO1 setpoint 4 parameter value	1000		INT	R/W
10D5H	AO1 setpoint 1 AO output	819	AO type of 0~20A or 0~5V: 0~4915 AO type of 4~20A or 1~5V: 819~4915 *Note: 4096 corresponds to 20A or 5V*	INT	R/W
10D6H	AO1 setpoint 2 AO output	0		INT	R/W
10D7H	AO1 setpoint 3 AO output	0		INT	R/W
10D8H	AO1 setpoint 4 AO output	4096		INT	R/W
109H-10E1H	AO2 Setpoints Setting (same as AO1)		Same as AO1	INT	R/W
10E2H-10EAH	AO3 Setpoints Setting (same as AO1)		Same as AO1	INT	R/W
10EBH-10F3H	AO4 Setpoints Setting (same as AO1)		Same as AO1	INT	R/W

NOTE: AO Slope Number Selection for input/output transfer curve

When the AO Slope Number Selection is configured as 1, users are required to set the following parameters:

- AO Setpoint 1 Parameter Value
- AO Setpoint 1 AO Output
- AO Setpoint 4 Parameter Value
- AO Setpoint 4 AO Output
- When the AO Slope Number Selection is configured as 2, users are required to set the following parameters:
- AO Setpoint 1 Parameter Value
- AO Setpoint 1 AO Output
- AO Setpoint 2 Parameter Value
- AO Setpoint 2 AO Output
- AO Setpoint 4 Parameter Value
- AO Setpoint 4 AO Output

When the AO Slope Number Selection is configured as 3, users are required to set the following parameters:

- AO Setpoint 1 Parameter Value
- AO Setpoint 1 AO Output

Distributed by MicroDAQ, LLC
(603) 746-5524
www.microdaq.com

- AO Setpoint 2 Parameter Value
- AO Setpoint 2 AO Output
- AO Setpoint 3 Parameter Value
- AO Setpoint 3 AO Output
- AO Setpoint 4 Parameter Value
- AO Setpoint 4 AO Output

Parameter value range setting

Ensure that AO Setpoint 1 Parameter Value, AO Setpoint 2 Parameter Value, AO Setpoint 3 Parameter Value, and AO Setpoint 4 Parameter Value are set in increasing numerical order. This sequential arrangement is crucial to maintain the proper operation of the AO.

It is also important to confirm that all the AO Setpoint Parameter Values fall within an acceptable range, and the range is determined by the chosen AO Parameter. Below is the range for each AO Parameter:

Frequency: 45Hz ~ 65Hz, real setting value is 4500 ~ 6500.

Phase voltage V1, V2, V3 and average phase voltage: 0~480V, real setting value is 0~4800.

Line voltage V12, V23, V31 and average line voltage: 0~831V, real setting value is 0~8310.

Current I1, I2, I3 and average current: 0~10A, real setting value is 0~10000.

Power Pa, Pb and Pc: -4800~4800W, real setting value is -4800~4800.

System power: -14400~14400W, real setting value is -14400~14400.

Reactive power Qa, Qb and Qc: -4800~4800 Var, real setting value is-4800~4800.

System reactive power: -14400~14400 Var.

Apparent power Sa, Sb and Sc: 0~4800VA, real setting value is 0~4800.

System apparent power: 0~14400VA, real setting value is 0~14400.

Power factor PFa, PFb, PFc and System power factor: -1~1, real setting value is -1000~1000.

AO output range setting

Ensure that AO Setpoint 1 AO Output, AO Setpoint 2 AO Output, AO Setpoint 3 AO Output, and AO Setpoint 4 AO Output are set in increasing numerical order. This sequential arrangement is crucial to maintain the proper operation of the AO.

Moreover, it is essential to verify that all the AO Setpoint AO Outputs fall within the range of acceptable AO output values. The permissible ranges are as follows:

- When the AO type is 0~20mA, the real setting value range is 0~4915, and the relationship between the output value and the real setting value is Output(mA) = real setting value * 20 / 4096.
- When the AO type is 4~20mA, the real setting value range is 819~4915, and the relationship between the output value and the real setting value is Output(mA) = real setting value * 20 / 4096.
- When the AO type is 0~5V, the real setting value range is 0~4915, and the relationship between the output value and the real setting value is Output(V) = real setting value * 5 / 4096.

- When the AO type is 1~5V, the real setting value range is 819~4915, and the relationship between the output value and the real setting value is Output(V) = real setting value * 5 / 4096.

6.3.15 I/O Module Readings Settings

DI Counter

DI are arranged based on the expanded I/O module addresses. Users can check the count number of DI in correlation with those modules. The DI counting record is stored in non-volatile memory and will not be erased when the power is off. It can be reset via communication and display panel. Data type is "Dword".

Table 6-47 I/O Module DI Pulse Count Reading

DI Counter: 03H Read						
Address(H)	**Address(D)**	**Symbol**	**Parameter**	**Range**	**Data Type**	**Access Property**
AXM-IO1-1						
4349H-434AH	17225-17226	DI_111	DI1 Pulse Counter Number	0~4294967295	Dword	R
434BH-434CH	17227-17228	DI_112	DI2 Pulse Counter Number	0~4294967295	Dword	R
434DH-434EH	17229-17230	DI_113	DI3 Pulse Counter Number	0~4294967295	Dword	R
434FH-4350H	17231-17232	DI_114	DI4 Pulse Counter number	0~4294967295	Dword	R
4351H-4352H	17233-17234	DI_115	DI5 Pulse Counter Number	0~4294967295	Dword	R
4353H-4354H	17235-17236	DI_116	DI6 Pulse Counter Number	0~4294967295	Dword	R
AXM-IO2-1						
4355H-4356H	17237-17238	DI_211	DI7 Pulse Counter Number	0~4294967295	Dword	R
4357H-4358H	17239-17240	DI_212	DI8 Pulse Counter Number	0~4294967295	Dword	R
4359H-435AH	17241-17242	DI_213	DI9 Pulse Counter Number	0~4294967295	Dword	R
435BH-435CH	17243-17244	DI_214	DI10 Pulse Counter Number	0~4294967295	Dword	R
AXM-IO3-1						
435DH-435EH	17245-17246	DI_311	DI11 Pulse Counter Number	0~4294967295	Dword	R
435FH-4360H	17247-17248	DI_312	DI12 Pulse Counter Number	0~4294967295	Dword	R
4361H-4362H	17249-17250	DI_313	DI13 Pulse Counter Number	0~4294967295	Dword	R
4363H-4364H	17251-17252	DI_314	DI14 Pulse Counter Number	0~4294967295	Dword	R
AXM-IO1-2						
4365H-4366H	17253-17254	DI_121	DI15 Pulse Counter Number	0~4294967295	Dword	R
4367H-4368H	17255-17256	DI_122	DI16 Pulse Counter Number	0~4294967295	Dword	R
4369H-436AH	17257-17258	DI_123	DI17 Pulse Counter Number	0~4294967295	Dword	R
436BH-436CH	17259-17260	DI_124	DI18 Pulse Counter Number	0~4294967295	Dword	R
436DH-436EH	17261-17262	DI_125	DI19 Pulse Counter Number	0~4294967295	Dword	R
436FH-4370H	17263-17264	DI_126	DI20 Pulse Counter Number	0~4294967295	Dword	R
AXM-IO2-2						
4371H-4372H	17265-17266	DI_221	DI21 Pulse Counter Number	0~4294967295	Dword	R
4373H-4374H	17267-17268	DI_222	DI22 Pulse Counter Number	0~4294967295	Dword	R
4375H-4376H	17269-17270	DI_223	DI23 Pulse Counter Number	0~4294967295	Dword	R
4377H-4378H	17271-17272	DI_224	DI24 Pulse Counter Number	0~4294967295	Dword	R
AXM-IO3-2						
4379H-437AH	17273-17274	DI_321	DI25 Pulse Counter Number	0~4294967295	Dword	R
437BH-437CH	17275-17276	DI_322	DI26 Pulse Counter Number	0~4294967295	Dword	R
437DH-437EH	17277-17278	DI_323	DI27 Pulse Counter Number	0~4294967295	Dword	R
437FH-4380H	17279-17280	DI_324	DI28 Pulse Counter Number	0~4294967295	Dword	R

Distributed by MicroDAQ, LLC
(603) 746-5524
www.microdaq.com

DI Status

Table 6-48 I/O Module DI Status Reading

DI Status: 02H Read						
Address(H)	**Address(D)**	**Symbol**	**Parameter**	**Range**	**Data Type**	**Access Property**
AXM-101-1						
0000H	0	DI_111	DI1 Status	0: OFF 1: ON	Bit	R
0001H	1	DI_112	DI2 Status	0: OFF 1: ON	Bit	R
0002H	2	DI_113	DI3 Status	0: OFF 1: ON	Bit	R
0003H	3	DI_114	DI4 Status	0: OFF 1: ON	Bit	R
0004H	4	DI_115	DI5 Status	0: OFF 1: ON	Bit	R
0005H	5	DI_116	DI6 Status	0: OFF 1: ON	Bit	R
AXM-IO2-1						
0006H	6	DI_211	DI7 Status	0: OFF 1: ON	Bit	R
0007H	7	DI_212	DI8 Status	0: OFF 1: ON	Bit	R
0008H	8	DI_213	DI9 Status	0: OFF 1: ON	Bit	R
0009H	9	DI_214	DI10 Status	0: OFF 1: ON	Bit	R
AXM-IO3-1						
000AH	10	DI_311	DI11 Status	0: OFF 1: ON	Bit	R
000BH	11	DI_312	DI12 Status	0: OFF 1: ON	Bit	R
000CH	12	DI_313	DI13 Status	0: OFF 1: ON	Bit	R
000DH	13	DI_314	DI14 Status	0: OFF 1: ON	Bit	R
AXM-IO1-2						
000EH	14	DI_121	DI15 Status	0: OFF 1: ON	Bit	R
000FH	15	DI_122	DI16 Status	0: OFF 1: ON	Bit	R
0010H	16	DI_123	DI17 Status	0: OFF 1: ON	Bit	R
0011H	17	DI_124	DI18 Status	0: OFF 1: ON	Bit	R

DI Status: 02H Read						
Address(H)	Address(D)	Symbol	Parameter	Range	Data Type	Access Property
0012H	18	DI_125	DI19 Status	0: OFF 1: ON	Bit	R
0013H	19	DI_126	DI20 Status	0: OFF 1: ON	Bit	R
AXM-IO2-2						
0014H	20	DI_221	DI21 Status	0: OFF 1: ON	Bit	R
0015H	21	DI_222	DI22 Status	0: OFF 1: ON	Bit	R
0016H	22	DI_223	DI23 Status	0: OFF 1: ON	Bit	R
0017H	23	DI_224	DI24 Status	0: OFF 1: ON	Bit	R
AXM-IO3-2						
0018H	24	DI_321	DI25 Status	0: OFF 1: ON	Bit	R
0019H	25	DI_322	DI26 Status	0: OFF 1: ON	Bit	R
001AH	26	DI_323	DI27 Status	0: OFF 1: ON	Bit	R
001BH	27	DI_324	DI28 Status	0: OFF 1: ON	Bit	R

Analog Input Sample Value

The Analog Input value is mapped to the range of 0~4095. Data type is "Word".

Table 6-49 I/O Module AI Sample Value

AI Input Value: 03H Read						
Address(H)	Address(D)	Symbol	Parameters	Range	Data Type	Access Property
4385H	17285	AI_311	AI1 Sample value	0~4095	Word	R
4386H	17286	AI_312	AI2 Sample value	0~4095	Word	R
4387H	17287	AI_321	AI3 Sample value	0~4095	Word	R
4388H	17288	AI_322	AI4 Sample value	0~4095	Word	R

Analog Output Actual Value

The output of AO is the actual value of output. There are two output options for AO: Voltage (V) or Current (mA). Data type is "Float".

Table 6-50 I/O Module AO Actual Value

AO Output Value: 03H Read						
Address(H)	Address(D)	Symbol	Parameters	Range	Data Type	Access Property
4389H-438AH	17289-17290	AO_211	Value of AO1		Float	R

Distributed by MicroDAQ, LLC
(603) 746-5524
www.microdaq.com

AO Output Value: 03H Read						
Address(H)	Address(D)	Symbol	Parameters	Range	Data Type	Access Property
438BH-438CH	17291-17292	AO_212	Value of AO2		Float	R
438DH-438EH	17293-17294	AO_221	Value of A03		Float	R
438FH-4390H	17295-17296	AO_222	Value of AO4		Float	R

Relay Output

Table 6-51 I/O Module Relay Output

RO Status: 01H Read, 05H Control						
Address(H)	Address(D)	Symbol	Parameters	Range	Data Type	Access Property
AXM-101-1						
0000H	0	RO_111	RO1	0:OFF 1:ON	Bit	R
0001H	1	RO_112	RO2	0:OFF 1:ON	Bit	R
AXM-IO3-1						
0002H	2	RO_311	RO3	0: OFF 1: ON	Bit	R
0003H	3	RO_312	RO4	0: OFF 1: ON	Bit	R
AXM-IO1-2						
0004H	4	RO_121	RO5	0: OFF 1: ON	Bit	R
0005H	5	RO_122	RO6	0: OFF 1: ON	Bit	R
AXM-IO3-2						
0006H	6	RO_321	RO7	0: OFF 1: ON	Bit	R
0007H	7	RO_322	RO8	0: OFF 1: ON	Bit	R

SOE Records

There are twenty groups of records with the same format. Before gathering SOE records, the selected I/O module must be SOE enabled. If the SOE enabled I/O module is not connected, SOE record logs will not be collected.

Table 6-52 SOE Records

Address	Parameters	Code	Range	Data Type	Property
4339H~439FH	First group: timestamp: yyyy:mm:dd:hh:mm:ss:ms	F3		Word	R
43A0H	First group: DI status	F1		Word	R
43A1H~4438H	2nd to 20th group			Word	R

Address	Parameters	Code	Range	Data Type	Property
4439H	SOE Enabled I/O Module	F1	0: None 1: AXM-IO11 2: AXM-IO21 3: AXM-IO31 4: AXM-IO12 5: AXM-IO22 6: AXM-IO32	Word	R

6.3.16 SunSpec Registers

Table 6-53 SunSpec Registers

SunSpec: 03H Read, 10H Write							
Address(H)	**Address(D)**	**Parameters**	**Range**	**Default**	**Data Type**	**Access Property**	**Number of Registers**
C350H-C351H	50000-50001	SunSpec_ID	0x53756e53		Uint16	R	2
C352H	50002	ID	1		Uint16	R	1
C353H	50003	Length	65		String	R	1
C354H-C363H	50004-50019	Manufacturer		Accuenergy	String	R	16
C364H-C373H	50020-50035	Model	Manufacturer Specific Value (32 characters)	Acuvim-L	String	R	16
C374H-C37BH	50036-50043	Options	Manufacturer Specific Value (16 characters)	Acuvim-CL/EL	String	R	8
C37CH-C383H	50044-50051	Version	Manufacturer Specific Value (16 characters)		String	R	8
C384H-C393H	50052-50067	Serial Number	Manufacturer Specific Value (32 characters)		String	R	16
C394H	50068	Device Address	Modbus Device Address		Uint16	R	1
C395H	50069	ID	Meter Configuration: Single Phase (AN or AB): 201 Split Single Phase (ABN): 202 WYE-Three Phase (ABCN): 203 Delta Three Phase (ABC): 204		Uint16	R	1
C396H	50070	Length	105		Uint16	R	1
C397H	50071	Current: Amps (Average)	0~32767 A		Int16	R	1
C398H	50072	Current: Phase A	0~32767 A		Int16	R	1
C399H	50073	Current: Phase B	0~32767 A		Int16	R	1
C39AH	50074	Current: Phase C	0~32767 A		Int16	R	1
C39BH	50075	Current: Scale Factor/ CT Ratio	-3~2 (used an exponent of a power of 10)		sunssf	R	1
C39CH	50076	Voltage: Average Phase	0~9999 V		int16	R	1
C39DH	50077	Voltage: Phase A	0~32767 V		int16	R	1
C39EH	50078	Voltage: Phase B	0~32767 V		int16	R	1
C39FH	50079	Voltage: Phase C	0~32767 V		int16	R	1
C3A0H	50080	Voltage: Line-Line Average	0~32767 V		int16	R	1

Distributed by MicroDAQ, LLC
(603) 746-5524
www.microdaq.com

SunSpec: 03H Read, 10H Write							
Address(H)	**Address(D)**	**Parameters**	**Range**	**Default**	**Data Type**	**Access Property**	**Number of Registers**
C3A1H	50081	Voltage: Line AB	0~32767 V		int16	R	1
C3A2H	50082	Voltage: Line BC	0~32767 V		int16	R	1
C3A3H	50083	Voltage: Line CA	0~32767 V		int16	R	1
C3A4H	50084	Voltage Scale Factor	-2~4(used as an exponent of a power of 10)		sunssf	R	1
C3A5H	50085	Frequency	45-65Hz		int16	R	1
C3A6H	50086	Frequency Scale Factor	-2(used as an exponent of a power of10)		sunssf	R	1
C3A7H	50087	Total Active Power	-32768~32767 W		int16	R	1
C3A8H	50088	Active Power: Phase A Watts	-32768~32767 W		int16	R	1
C3A9H	50089	Active Power: Phase B Watts	-32768~32767 W		int16	R	1
C3AAH	50090	Active Power: Phase C Watts	-32768~32767		int16	R	1
C3ABH	50091	Active Power Scale Factor	-1~8(used as an exponent of a power of 10)		sunssf	R	1
C3ACH	50092	Total Apparent Power	-32768~32367 VA		int16	R	1
C3ADH	50093	Apparent Power: Phase A VA	-32768~32367 VA		int16	R	1
C3AEH	50094	Apparent Power: Phase B VA	-32768~32367 VA		int16	R	1
C3AFH	50095	Apparent Power: Phase C VA	-32768~32767 VA		int16	R	1
C3B0H	50096	Apparent Power Scale Factor	-1~4(used as an exponent of a power of 10)		sunssf	R	1
C3B1H	50097	Total Reactive Power	-32768~32767 var		int16	R	1
C3B2H	50098	Reactive Power: Phase A var	-32768~32767 var		int16	R	1
C3B3H	50099	Reactive Power: Phase B var	-32768~32767 var		int16	R	1
C3B4H	50100	Reactive Power: Phase C var	-32768~32767 var		int16	R	1
C3B5H	50101	Reactive Power Scale Factor	-1~8(used as an exponent of a power of 10)		sunssf	R	1
C3B6H	50102	Power Factor	-1000~1000		int16	R	1
C3B7H	50103	Power Factor: Phase A PF	-1000~1000		int16	R	1
C3B8H	50104	Power Factor: Phase B PF	-1000~1000		int16	R	1
C3B9H	50105	Power Factor: Phase C PF	-1000~1000		int16	R	1
C3BAH	50106	Power Factor Scale Factor	-3(used an exponent of a power of 10)		sunssf	R	1
C3BBH-C3BCH	50107-50108	Total Export Active Energy	0~999999999 Wh		acc32	R/W	2
C3BDH-C3BEH	50109-50110	Export Active Energy: Phase A	0~999999999 Wh		acc32	R/W	2
C3BFH-C3C0H	50111-50112	Export Active Energy: Phase B	0~999999999 Wh		acc32	R/W	2
C3C1H-C3C2H	50113-50114	Export Active Energy: Phase C	0~999999999 Wh		acc32	R/W	2
C3C3H-C3C4H	50115-50116	Total Import Active Energy	0~999999999 Wh		acc32	R/W	2
C3C5H-C3C6H	50117-50118	Import Active Energy: Phase A	0~999999999 Wh		acc32	R/W	2
C3C7H-C3C8H	50119-50120	Import Active Energy: Phase B	0~999999999 Wh		acc32	R/W	2
C3C9H-C3CAH	50121-50122	Import Active Energy: Phase C	0~999999999 Wh		acc32	R/W	2
C3CBH	50123	Active Energy Scale Factor	0 for Secondary and 3 for Primary (used as an exponent of a power of 10)		sunssf	R	1

SunSpec: 03H Read, 10H Write							
Address(H)	**Address(D)**	**Parameters**	**Range**	**Default**	**Data Type**	**Access Property**	**Number of Registers**
C3CCH-C3CDH	50124-50125	Total Export Apparent Energy	0~999999999 VAh		acc32	R/W	2
C3CEH-C3CFH	50126-50127	Export Apparent Energy: Phase A	0~999999999 VAh		acc32	R/W	2
C3D0H-C3D1H	50128-50129	Export Apparent Energy: Phase B	0~999999999 VAh		acc32	R/W	2
C3D2H-C3D3H	50130-50131	Export Apparent Energy: Phase C	0~999999999 VAh		Acc32	R/W	2
C3D4H- C3D5H	50132-50133	Total Import Apparent Energy	0~999999999 VAh		Acc32	R/W	2
C3D6H-C3D7H	50134-50135	Import Apparent Energy: Phase A	0~999999999 VAh		Acc32	R/W	2
C3D8H-C3D9H	50136-50137	Import Apparent Energy: Phase B	0~999999999 VAh		Acc32	R/W	2
C3DAH-C3DBH	50138-50139	Import Apparent Energy: Phase C	0~999999999 VAh		Acc32	R/W	2
C3DCH	50140	Apparent Energy Scale Factor	0 for Secondary and 3 for Primary (used as an exponent of a power of 10)		sunssf	R	1
C3DDH-C3DEH	50141-50142	Total Import Reactive Energy in Quadrant 1	0~999999999 varh		acc32	R/W	2
C3DFH-C3E0H	50143-50144	Import Reactive Energy in Quadrant 1: Phase A	0~999999999 varh		acc32	R/W	2
C3E1H-C3E2H	50145-50146	Import Reactive Energy in Quadrant 1: Phase B	0~999999999 varh		acc32	R/W	2
C3E3H-C3E4H	50174-50148	Import Reactive Energy in Quadrant 1: Phase C	0~999999999 varh		acc32	R/W	2
C3E5H-C3E6H	50149-50150	Total Import Reactive Energy in Quadrant 2	0~999999999 varh		acc32	R/W	2
C3E7H-C3E8H	50151-50152	Import Reactive Energy in Quadrant 2: Phase A	0~999999999 varh		acc32	R/W	2
C3E9H-C3EAH	50153-50154	Import Reactive Energy in Quadrant 2: Phase B	0~999999999 varh		acc32	R/W	2
C3EBH-C3ECH	50155-50156	Import Reactive Energy in Quadrant 2: Phase C	0~999999999 varh		acc32	R/W	2
C3EDH-C3EEH	50157-50158	Total Export Reactive Energy in Quadrant 3	0~999999999 varh		acc32	R/W	2
C3EFH-C3F0H	50159-50160	Export Reactive Energy in Quadrant 3: Phase A	0~999999999 varh		acc32	R/W	2
C3F1H-C3F2H	50161-50162	Export Reactive Energy in Quadrant 3: Phase B	0~999999999 varh		acc32	R/W	2
C3F3H-C3F4H	50163-50164	Export Reactive Energy in Quadrant 3: Phase C	0~999999999 varh		acc32	R/W	2
C3F5H-C3F6H	50165-50166	Total Export Reactive Energy in Quadrant 4	0~999999999 varh		acc32	R/W	2
C3F7H-C3F8H	50167-50168	Export Reactive Energy in Quadrant 4: Phase A	0~999999999 varh		acc32	R/W	2
C3F9H-C3FAH	50169-50170	Export Reactive Energy in Quadrant 4: Phase B	0~999999999 varh		acc32	R/W	2
C3FBH-C3FCH	50171-50172	Export Reactive Energy in Quadrant 4: Phase C	0~999999999 varh		acc32	R/W	2
C3FDH	50173	Reactive Power Scale Factor	0 for Secondary and 3 for Primary (used as an exponent of a power of 10)		sunssf	R	1
C3FEH-C3FFH	50174-50175	Meter Event Flags	0		Bitfield32	R	2
C400H	50176	SunSpec_end_ID: Sunspec	0XFFFF		uint16		1
C401H	20177	SunSpec_end_ID: Sunspec	0		uint16		1

Distributed by MicroDAQ, LLC
(603) 746-5524
www.microdaq.com

Chapter 6: Communication Part II

6.3.17 Over/Under Alarm Setting

This setting consists of alarm settings and single channel alarm settings. Alarm settings screen allow users to enable alarm, apply "And" logic between alarms, and to configure output to DO channel. Single channel alarm settings include detailed configuration for each individual alarm, specifying their triggering conditions. There are 16 groups of registers with the same format.

Function code: 03H for reading, 10H for writing.

Please refer to Chapter 4 for more details on Alarm Setting.

Alarm Settings

Table 6-54 Alarm Settings

Alarm Settings: 03H Read, 10H Write					
Address(H)	**Address(D)**	**Parameters**	**Range**	**Data Type**	**Access Property**
1046H	4166	Enable All Alarm Function	0: Disable 1: Enable	Word	R/W
1047H	4167	Enable Alarm LCD Flashing	0: Disable 1: Enable	Word	R/W
1048H	4168	Enable Alarm channels	Bit0: Channel 1 Bit1: Channel 2 ... Bit15: Channel 16 1: Enable 0: Disable	Word	R/W
1049H	4169	Enable "And" logic between alarm channels	Bit0: logic switch between Channel 1 and 2 Bit1: logic switch between Channel 3 and 4 Bit2: logic switch between Channel 5 and 6 Bit3: logic switch between Channel 7 and 8 Bit4: logic switch between Channel 9 and 10 Bit5: logic switch between Channel 11 and 12 Bit6: logic switch between Channel 13 and 14 Bit7: logic switch between Channel 15 and 16 1: Enable 0: Disable	Word	R/W
104AH	4170	Alarm channels to trigger DO1	Bit0: Channel 1 Bit1: Channel 2 ... Bit15: Channel 16 1: Enable 0: Disable	Word	R/W

Alarm Settings: 03H Read, 10H Write					
Address(H)	**Address(D)**	**Parameters**	**Range**	**Data Type**	**Access Property**
104BH	4171	Alarm channels to trigger DO2	Bit0: Channel 1 Bit1: Channel 2 ... Bit15: Channel 16 1: Enable 0: Disable	Word	R/W
104CH	4172	Alarm channels to trigger DO3	Bit0: Channel 1 Bit1: Channel 2 ... Bit15: Channel 16 1: Enable 0: Disable	Word	R/W
104DH	4173	Alarm channels to trigger DO4	Bit0: Channel 1 Bit1: Channel 2 ... Bit15: Channel 16 1: Enable 0: Disable	Word	R/W

Single Channel Alarm Settings

Table 6-55 Single Channel Alarm Settings

Single Channel Alarm Settings: 03H Read, 10H Write					
Address(H)	**Address(D)**	**Parameters**	**Range**	**Data Type**	**Access Property**
104EH	4174	Channel 1: Parameter Selection	0~79 Note: Please refer to Table 5-6	Word	R/W
104FH	4175	Channel 1: Comparison Mode	1: Greater than 2: Equal to 3: Less than	Word	R/W
1050H	4176	Channel 1: Setpoint (Threshold) Value	The available setting range depends on the selected parameter	Word	R/W
1051H	4177	Channel 1: Delay	0~60000 (*10ms)	Word	R/W
1052H	4178	Channel 1: RO selection	0: none 1~8: RO ID	Word	R/W
1053H	4179	Channel 2: Parameter Selection	0~79 Note: Please refer to Table 5-6	Word	R/W
1054H	4180	Channel 2: Comparison Mode	1: Greater than 2: Equal to 3: Less than	Word	R/W

Distributed by MicroDAQ, LLC
(603) 746-5524
www.microdaq.com

Single Channel Alarm Settings: 03H Read, 10H Write					
Address(H)	**Address(D)**	**Parameters**	**Range**	**Data Type**	**Access Property**
1055H	4181	Channel 2: Setpoint (Threshold) Value	The available setting range depends on the selected parameter	Word	R/W
1056H	4182	Channel 2: Delay	0~60000 (*10ms)	Word	R/W
1057H	4183	Channel 2: RO selection	0: none 1~8: RO ID	Word	R/W
1058H	4184	Channel 3: Parameter Selection	0~79 Note: Please refer to Table 5-6	Word	R/W
1059H	4185	Channel 3: Comparison Mode	1: Greater than 2: Equal to 3: Less than	Word	R/W
105AH	4186	Channel 3: Setpoint (Threshold) Value	The available setting range depends on the selected parameter	Word	R/W
105BH	4187	Channel 3: Delay	0~60000 (*10ms)	Word	R/W
105CH	4188	Channel 3: RO selection	0: none 1~8: RO ID	Word	R/W
105DH	4189	Channel 4: Parameter Selection	0~79 Note: Please refer to Table 5-6	Word	R/W
105EH	4190	Channel 4: Comparison Mode	1: Greater than 2: Equal to 3: Less than	Word	R/W
105FH	4191	Channel 4: Setpoint (Threshold) Value	The available setting range depends on the selected parameter	Word	R/W
1060H	4192	Channel 4: Delay	0~60000 (*10ms)	Word	R/W
1061H	4193	Channel 4: RO selection	0: none 1~8: RO ID	Word	R/W
1062H	4194	Channel 5: Parameter Selection	0~79 Note: Please refer to Table 5-6	Word	R/W
1063H	4195	Channel 5: Comparison Mode	1: Greater than 2: Equal to 3: Less than	Word	R/W
1064H	4196	Channel 5: Setpoint (Threshold) Value	The available setting range depends on the selected parameter	Word	R/W
1065H	4197	Channel 5: Delay	0~60000 (*10ms)	Word	R/W
1066H	4198	Channel 5: RO selection	0: none 1~8: RO ID	Word	R/W
1067H	4199	Channel 6: Parameter Selection	0~79 Note: Please refer to Table 5-6	Word	R/W
1068H	4200	Channel 6: Comparison Mode	1: Greater than 2: Equal to 3: Less than	Word	R/W
1069H	4201	Channel 6: Setpoint (Threshold) Value	The available setting range depends on the selected parameter	Word	R/W
106AH	4202	Channel 6: Delay	0~60000 (*10ms)	Word	R/W
106BH	4203	Channel 6: RO selection	0: none 1~8: RO ID	Word	R/W

Single Channel Alarm Settings: 03H Read, 10H Write					
Address(H)	**Address(D)**	**Parameters**	**Range**	**Data Type**	**Access Property**
106CH	4204	Channel 7: Parameter Selection	0~79 Note: Please refer to Table 5-6	Word	R/W
106DH	4205	Channel 7: Comparison Mode	1: Greater than 2: Equal to 3: Less than	Word	R/W
106EH	4206	Channel 7: Setpoint (Threshold) Value	The available setting range depends on the selected parameter	Word	R/W
106FH	4207	Channel 7: Delay	0~60000 (*10ms)	Word	R/W
1070H	4208	Channel 7: RO selection	0: none 1~8: RO ID	Word	R/W
1071H	4209	Channel 8: Parameter Selection	0~79 Note: Please refer to Table 5-6	Word	R/W
1072H	4210	Channel 8: Comparison Mode	1: Greater than 2: Equal to 3: Less than	Word	R/W
1073H	4211	Channel 8: Setpoint (Threshold) Value	The available setting range depends on the selected parameter	Word	R/W
1074H	4212	Channel 8: Delay	0~60000 (*10ms)	Word	R/W
1075H	4213	Channel 8: RO selection	0: none 1~8: RO ID	Word	R/W
1076H	4214	Channel 9: Parameter Selection	0~79 Note: Please refer to Table 5-6	Word	R/W
1078H	4215	Channel 9: Comparison Mode	1: Greater than 2: Equal to 3: Less than	Word	R/W
1079H	4216	Channel 9: Setpoint (Threshold) Value	The available setting range depends on the selected parameter	Word	R/W
107AH	4217	Channel 9: Delay	0~60000 (*10ms)	Word	R/W
107BH	4218	Channel 9: RO selection	0: none 1~8: RO ID	Word	R/W
107CH	4219	Channel 10: Parameter Selection	0~79 Note: Please refer to Table 5-6	Word	R/W
107DH	4220	Channel 10: Comparison Mode	1: Greater than 2: Equal to 3: Less than	Word	R/W
107EH	4221	Channel 10: Setpoint (Threshold) Value	The available setting range depends on the selected parameter	Word	R/W
107FH	4222	Channel 10: Delay	0~60000 (*10ms)	Word	R/W
1080H	4223	Channel 10: RO selection	0: none 1~8: RO ID	Word	R/W
1081H	4224	Channel 11: Parameter Selection	0~79 Note: Please refer to Table 5-6	Word	R/W

Distributed by MicroDAQ, LLC
(603) 746-5524
www.microdaq.com

Single Channel Alarm Settings: 03H Read, 10H Write					
Address(H)	**Address(D)**	**Parameters**	**Range**	**Data Type**	**Access Property**
1081H	4225	Channel 11: Comparison Mode	1: Greater than 2: Equal to 3: Less than	Word	R/W
1082H	4226	Channel 11: Setpoint (Threshold) Value	The available setting range depends on the selected parameter	Word	R/W
1083H	4227	Channel 11: Delay	0~60000 (*10ms)	Word	R/W
1084H	4228	Channel 11: RO selection	0: none 1~8: RO ID	Word	R/W
1085H	4229	Channel 12: Parameter Selection	0~79 Note: Please refer to Table 5-6	Word	R/W
1086H	4230	Channel 12: Comparison Mode	1: Greater than 2: Equal to 3: Less than	Word	R/W
1087H	4231	Channel 12: Setpoint (Threshold) Value	The available setting range depends on the selected parameter	Word	R/W
1088H	4232	Channel 12: Delay	0~60000 (*10ms)	Word	R/W
1089H	4233	Channel 12: RO selection	0: none 1~8: RO ID	Word	R/W
108AH	4234	Channel 13: Parameter Selection	0~79 Note: Please refer to Table 5-6	Word	R/W
108BH	4235	Channel 13: Comparison Mode	1: Greater than 2: Equal to 3: Less than	Word	R/W
108CH	4236	Channel 13: Setpoint (Threshold) Value	The available setting range depends on the selected parameter	Word	R/W
108DH	4237	Channel 13: Delay	0~60000 (*10ms)	Word	R/W
108EH	4238	Channel 13: RO selection	1~8: RO ID	Word	R/W
108FH	4239	Channel 14: Parameter Selection	0~79 Note: Please refer to Table 5-6	Word	R/W
1090H	4240	Channel 14: Comparison Mode	1: Greater than 2: Equal to 3: Less than	Word	R/W
1091H	4241	Channel 14: Setpoint (Threshold) Value	The available setting range depends on the selected parameter	Word	R/W
1092H	4242	Channel 14: Delay	0~60000 (*10ms)	Word	R/W
1093H	4243	Channel 14: RO selection	0: none 1~8: RO ID	Word	R/W
1094H	4244	Channel 15: Parameter Selection	0~79 Note: Please refer to Table 5-6	Word	R/W
1095H	4245	Channel 15: Comparison Mode	1: Greater than 2: Equal to 3: Less than	Word	R/W
1096H	4246	Channel 15: Setpoint (Threshold) Value	The available setting range depends on the selected parameter	Word	R/W

Distributed by MicroDAQ, LLC
(603) 746-5524
www.microdaq.com

Single Channel Alarm Settings: 03H Read, 10H Write					
Address(H)	**Address(D)**	**Parameters**	**Range**	**Data Type**	**Access Property**
1097H	4247	Channel 15: Delay	0~60000 (*10ms)	Word	R/W
1098H	4248	Channel 15: RO selection	0: none 1~8: RO ID	Word	R/W
1099H	4249	Channel 16: Parameter Selection	0~79 Note: Please refer to Table 5-6	Word	R/W
109AH	4250	Channel 16: Comparison Mode	1: Greater than 2: Equal to 3: Less than	Word	R/W
109BH	4251	Channel 16: Setpoint (Threshold) Value	The available setting range depends on the selected parameter	Word	R/W
109CH	4252	Channel 16: Delay	0~60000 (*10ms)	Word	R/W
109DH	4253	Channel 16: RO selection	0: none 1~8: RO ID	Word	R/W

Alarming Parameter Code Table

Table 6-56 Alarming Parameter Code

Alarming Parameter Code Table					
Setting Value	**Alarming Object**	**Setting Value**	**Alarming Object**	**Setting Value**	**Alarming Object**
0	Frequency	1	Va	2	Vb
3	Vc	4	Average phase voltage	5	Vab
6	Vbc	7	Vca	8	Average line voltage
9	Current of phase A	10	Current of phase B	11	Current of phase C
12	Average current	13	Neutral current	14	Power of phase A
15	Power of phase B	16	Power of phase C	17	Power of all
18	Reactive power of phase A	19	Reactive power of phase B	20	Reactive power of phase C
21	Reactive power of all	22	Apparent power of phase A	23	Apparent power of phase B
24	Apparent power of phase C	25	Apparent power of all	26	PF of A
27	PF of B	28	PF of C	29	PF
30	Voltage unbalance factor U_{unbl}	31	Current unbalance factor I_{unbl}	32	Load characteristic (R/C/L)
33	$THD_{V1(V1 \text{ or } V12)}$	34	$THD_{V2(V2 \text{ or } V31)}$	35	$THD_{V3(V3 \text{ or } V23)}$
36	Average THD_V	37	THD_{I1}	38	THD_{I2}
39	THD_{I3}	40	Average THD_I	41	AI1 sampling value
42	AI2 sampling value	43	AI3 sampling value	44	AI4 sampling value
45	Active power demand of all	46	Reactive power demand of all	47	Apparent power demand of all
48	Current demand of phase A	49	Current demand of phase B	50	Current demand of phase C

NOTE:

1. When reversed phase sequence (51) is selected, whether the comparison mode or setpoint value is set or not will not affect the alarm result. In this case, the angle of Ub to Ua will be recorded.

2. When DI (52~79) is selected, whether the comparison mode is set or not will not affect the alarm result. In this case, the available setpoint values are 0, 1, 2, and 3.
   0: Stands for no alarm.

Distributed by MicroDAQ, LLC
(603) 746-5524
www.microdaq.com

1: Stands for DI alarm is ON, recovery is OFF.
2: Stands for DI alarm is OFF, recovery is ON.
3: Stands for DI alarm is OFF, recovery is ON, and present DI status is recorded.

Alarm Log

There are 16 groups of records with the same format. Please refer to Chapter 4 for more details about the Alarm Log.

Table 6-57 Alarm Log

Alarming Group Records: 03H Read					
Address(H)	**Address(D)**	**Parameters**	**Range**	**Data Type**	**Access Property**
42A9H	17065	Alarm Log 1: Alarm ID and Status	High Byte: Alarm ID Low Byte Bit0: Alarm Status Low Byte Bit1: Enable "AND" 1: On/Enable 0: Off/Not Enable	Word	R
42AAH	17066	Alarm Log 1: Alarm Parameter Code	0-79	Word	R
42ABH	17067	Alarm Log 1: Over/Under Limit Value	The available setting range depends on the selected parameter	Word	R
42ACH~42B2H	17068-17074	Alarm Log 1: Timestamp yyyy:mm:dd:hh:mm:ss:ms		Word	R
42B3H	17075	Alarm Log 2: Alarm ID and Status	High Byte: Alarm ID Low Byte Bit0: Alarm Status Low Byte Bit1: Enable "AND" 1: On/Enable 0: Off/Not Enable	Word	R
42B4H	17076	Alarm Log 2: Alarm Parameter Code	0-79	Word	R
42B5H	17077	Alarm Log 2: Over/Under Limit Value	The available setting range depends on the selected parameter	Word	R
42B6H-42BCH	17078-17084	Alarm Log 2: Timestamp yyyy:mm:dd:hh:mm:ss:ms		Word	R
42BDH	17085	Alarm Log 3: Alarm ID and Status	High Byte: Alarm ID Low Byte Bit0: Alarm Status Low Byte Bit1: Enable "AND" 1: On/Enable 0: Off/Not Enable	Word	R
42BEH	17086	Alarm Log 3: Alarm Parameter Code	0-79	Word	R
42BFH	17087	Alarm Log 3: Over/Under Limit Value	The available setting range depends on the selected parameter	Word	R
42C0H-42C6H	17088-17094	Alarm Log 3: Timestamp yyyy:mm:dd:hh:mm:ss:ms		Word	R

Distributed by MicroDAQ, LLC
(603) 746-5524
www.microdaq.com

Alarming Group Records: 03H Read					
Address(H)	**Address(D)**	**Parameters**	**Range**	**Data Type**	**Access Property**
42C7H	17095	Alarm Log 4: Alarm ID and Status	High Byte: Alarm ID Low Byte Bit0: Alarm Status Low Byte Bit1: Enable "AND" 1: On/Enable 0: Off/Not Enable	Word	R
42C8H	17096	Alarm Log 4: Alarm Parameter Code	0-79	Word	R
42C9H	17097	Alarm Log 4: Over/Under Limit Value	The available setting range depends on the selected parameter	Word	R
42CAH-42D0H	17098-17104	Alarm Log 4: Timestamp yyyy:mm:dd:hh:mm:ss:ms		Word	R
42D1H	17105	Alarm Log 5: Alarm ID and Status	High Byte: Alarm ID Low Byte Bit0: Alarm Status Low Byte Bit1: Enable "AND" 1: On/Enable 0: Off/Not Enable	Word	R
42D2H	17106	Alarm Log 5: Alarm Parameter Code	0-79	Word	R
42D3H	17107	Alarm Log 5: Over/Under Limit Value	The available setting range depends on the selected parameter	Word	R
42D4H-42DAH	170108-17114	Alarm Log 5: Timestamp yyyy:mm:dd:hh:mm:ss:ms		Word	R
42DBH	17115	Alarm Log 6: Alarm ID and Status	High Byte: Alarm ID Low Byte Bit0: Alarm Status Low Byte Bit1: Enable "AND" 1: On/Enable 0: Off/Not Enable	Word	R
42DCH	170116	Alarm Log 6: Alarm Parameter Code	0-79	Word	R
42DDH	17117	Alarm Log 6: Over/Under Limit Value	The available setting range depends on the selected parameter	Word	R
42DEH-42E4H	17118-17124	Alarm Log 6: Timestamp yyyy:mm:dd:hh:mm:ss:ms		Word	R
42E5H	17125	Alarm Log 7: Alarm ID and Status	High Byte: Alarm ID Low Byte Bit0: Alarm Status Low Byte Bit1: Enable "AND" 1: On/Enable 0: Off/Not Enable	Word	R
42E6H	17126	Alarm Log 7: Alarm Parameter Code	0-79	Word	R
42E7H	17127	Alarm Log 7: Over/Under Limit Value	The available setting range depends on the selected parameter	Word	R

Distributed by MicroDAQ, LLC
(603) 746-5524
www.microdaq.com

Alarming Group Records: 03H Read					
Address(H)	**Address(D)**	**Parameters**	**Range**	**Data Type**	**Access Property**
42E8H-42EEH	17128-17134	Alarm Log 7: Timestamp yyyy:mm:dd:hh:mm:ss:ms		Word	R
42EFH	17135	Alarm Log 8: Alarm ID and Status	High Byte: Alarm ID Low Byte Bit0: Alarm Status Low Byte Bit1: Enable "AND" 1: On/Enable 0: Off/Not Enable	Word	R
42F0H	17136	Alarm Log 8: Alarm Parameter Code	0-79	Word	R
42F1H	17137	Alarm Log 8: Over/Under Limit Value	The available setting range depends on the selected parameter	Word	R
42F2H-42F8H	17138-17144	Alarm Log 8: Timestamp yyyy:mm:dd:hh:mm:ss:ms		Word	R
42F9H	17145	Alarm Log 9: Alarm ID and Status	High Byte: Alarm ID Low Byte Bit0: Alarm Status Low Byte Bit1: Enable "AND" 1: On/Enable 0: Off/Not Enable	Word	R
42FAH	17146	Alarm Log 9: Alarm Parameter Code	0-79	Word	R
42FBH	17147	Alarm Log 9: Over/Under Limit Value	The available setting range depends on the selected parameter	Word	R
42FCH-4302H	17148-17154	Alarm Log 9: Timestamp yyyy:mm:dd:hh:mm:ss:ms		Word	R
4303H	17155	Alarm Log 10: Alarm ID and Status	High Byte: Alarm ID Low Byte Bit0: Alarm Status Low Byte Bit1: Enable "AND" 1: On/Enable 0: Off/Not Enable	Word	R
4304H	17156	Alarm Log 10: Alarm Parameter Code	0-79	Word	R
4305H	17157	Alarm Log 10: Over/Under Limit Value	The available setting range depends on the selected parameter	Word	R
4306H-430CH	17158-17164	Alarm Log 10: Timestamp yyyy:mm:dd:hh:mm:ss:ms		Word	R
430DH	17165	Alarm Log 11: Alarm ID and Status	High Byte: Alarm ID Low Byte Bit0: Alarm Status Low Byte Bit1: Enable "AND" 1: On/Enable 0: Off/Not Enable	Word	R
430EH	17166	Alarm Log 11: Alarm Parameter Code	0-79	Word	R

Distributed by MicroDAQ, LLC
(603) 746-5524
www.microdaq.com

Alarming Group Records: 03H Read					
Address(H)	**Address(D)**	**Parameters**	**Range**	**Data Type**	**Access Property**
430FH	17167	Alarm Log 11: Over/Under Limit Value	The available setting range depends on the selected parameter	Word	R
4310H-4316H	17168-17174	Alarm Log 11: Timestamp yyyy:mm:dd:hh:mm:ss:ms		Word	R
4317H	17175	Alarm Log 12: Alarm ID and Status	High Byte: Alarm ID Low Byte Bit0: Alarm Status Low Byte Bit1: Enable "AND" 1: On/Enable 0: Off/Not Enable	Word	R
4318H	17176	Alarm Log 12: Alarm Parameter Code	0-79	Word	R
4319H	17177	Alarm Log 12: Over/Under Limit Value	The available setting range depends on the selected parameter	Word	R
431AH-4320H	17178-17184	Alarm Log 12: Timestamp yyyy:mm:dd:hh:mm:ss:ms		Word	R
4321H	17185	Alarm Log 13: Alarm ID and Status	High Byte: Alarm ID Low Byte Bit0: Alarm Status Low Byte Bit1: Enable "AND" 1: On/Enable 0: Off/Not Enable	Word	R
4322H	17186	Alarm Log 13: Alarm Parameter Code	0-79	Word	R
4323H	17187	Alarm Log 13: Over/Under Limit Value	The available setting range depends on the selected parameter	Word	R
4324H-432AH	17188-17194	Alarm Log 13: Timestamp yyyy:mm:dd:hh:mm:ss:ms		Word	R
432BH	17195	Alarm Log 14: Alarm ID and Status	High Byte: Alarm ID Low Byte Bit0: Alarm Status Low Byte Bit1: Enable "AND" 1: On/Enable 0: Off/Not Enable	Word	R
432CH	17196	Alarm Log 14: Alarm Parameter Code	0-79	Word	R
432DH	17197	Alarm Log 14: Over/Under Limit Value	The available setting range depends on the selected parameter	Word	R
432EH-4334H	17198-17204	Alarm Log 14: Timestamp yyyy:mm:dd:hh:mm:ss:ms		Word	R
4335H	17205	Alarm Log 15: Alarm ID and Status	High Byte: Alarm ID Low Byte Bit0: Alarm Status Low Byte Bit1: Enable "AND" 1: On/Enable 0: Off/Not Enable	Word	R

Distributed by MicroDAQ, LLC
(603) 746-5524
www.microdaq.com

Alarming Group Records: 03H Read					
Address(H)	**Address(D)**	**Parameters**	**Range**	**Data Type**	**Access Property**
4336H	17206	Alarm Log 15: Alarm Parameter Code	0-79	Word	R
4337H	17207	Alarm Log 15: Over/Under Limit Value	The available setting range depends on the selected parameter	Word	R
4338H-433EH	17208-17214	Alarm Log 15: Timestamp yyyy:mm:dd:hh:mm:ss:ms		Word	R
433FH	17215	Alarm Log 16: Alarm ID and Status	High Byte: Alarm ID Low Byte Bit0: Alarm Status Low Byte Bit1: Enable "AND" 1: On/Enable 0: Off/Not Enable	Word	R
4340H	17216	Alarm Log 16: Alarm Parameter Code	0-79	Word	R
4341H	17217	Alarm Log 16: Over/Under Limit Value	The available setting range depends on the selected parameter	Word	R
4342H-4348H	17218-17224	Alarm Log 16: Timestamp yyyy:mm:dd:hh:mm:ss:ms		Word	R

6.3.18 Data Logging

Data Logging Setting

To generate historical logs for the selected parameters, users need to set up the Acuvim-L meter to copy selected parameters from their corresponding Modbus registers into the historical log records. Since certain parameters occupy two registers, the programmable settings for the historical logs include a list of descriptors. Each descriptor lists the number of Modbus registers associated with the specified parameter. Combining these descriptors allow the interpretation of historical log record.

For example: Registers 4002H and 4003H are programmed to be recorded by the historical log. Since two registers are used, the corresponding descriptor is set as 2. These registers program the log to record "Volts AN".

The historical log programmable settings consist of three blocks, one for each log. Each log functions identically, so only the details of historical log 1 are described here. All register addresses in this section are shown within the address range of historical log 1.

1100H-11B9H (Historical Data Log 1)

11C0H-1279H (Historical Data Log 2)

1280H-1339H (Historical Data Log 3)

1500H-15B9H (Historical Data Log 4)

Block Size: 186 registers per log (372 bytes)

Data Log Setting's Address Map is shown in Table 6-58 below.

Table 6-58 Data Log Setting's Address Map

Address	**1100H**		**1101H**	
Byte	0 (low byte)	1 (high byte)	2 (low byte)	3 (high byte)
Value	Sectors	Registers	Interval	

Registers: The number of registers to be logged in the record ranges from 0 to 117. The record's size within memory is calculated as Size = 12 + Number of Register x 2.

Sectors: The number of memory sectors allocated to this log, where each sector is 64kb in size. Among the three historical logs, there are a total of 100 sectors available for allocation. The valid allocation range is from 0 to 100 (When the sector is set to 0, this log is disabled).

Interval: The interval at which data is captured for historical log records can be adjusted within the acceptable range of 0 to 1440 minutes. When the interval is set to 0, this log is disabled.

NOTE: When Registers, Sectors, or Interval is set to zero, this log is disabled.

Register List

Registers: 1102H-1176H

Size: 1 or 2 register(s) per parameter, 117 available registers per historical log.

The register list controls which Modbus registers are recorded in each historical log record. Since many parameters, such as Voltage and Energy, occupy more than a single register, multiple registers are allocated for those parameters.

For example: To record "Volts AN" into the historical log, the Modbus addresses (4002H and 4003H) associated with "Volts AN" are assigned and programmed to the log record list so that information can be stored into the historical log registers.

- Unassigned register slots should be set to either 0000H or FFFFH to indicate their non-association with any parameters.
- The actual size of the record and the number of items in the register list, which are used, are determined by the registers in the header.
- The range of valid register addresses that can be recorded in the historical log registers are 4000H-412BH, 4294H-42A8H, 4349H-4398H, 4500H-461BH, 4620H-463DH.

Item Descriptor List

Registers: 1177H-11B1H

Size: 1 byte per item, 117 bytes (59 registers)

The register list describes what to log, while the item descriptor list interprets the logged information. Each descriptor describes the number of Modbus addresses required to represent a parameter. For each parameter, either 1 or 2 addresses will be used.

For example: Assuming the first descriptor is 2, and the second descriptor is 1, then the first 2 register items are associated with the first descriptor, while the third register item corresponds to the second descriptor.

NOTE: As demonstrated by the example above, it is not a one-to-one relationship between the register list and the descriptor list. A single descriptor may refer to two register items.

Logging Time Setting

In the scenario where data logging only records one period data, or only starts from a specific time, the corresponding time and logging mode should be set accordingly for the data log function to work.

Modbus address 11B2H is used for the data logging mode selection. The following describes different logging modes:

Distributed by MicroDAQ, LLC
(603) 746-5524
www.microdaq.com

- Setting register 11B2H to 0 configures the logging mode as Mode 1, which starts logging immediately and continues until the memory is full (operating on a First In First Out basis).
- Setting register 11B2H to 1 configures the logging mode as Mode 2. This mode initiates or terminates logging based on predefined start and end times.
  - The start time is set in registers 11B3H-11B5H (start year, month, day, hour, minute, and second), and the end time is set in registers 11B6H-11B8H (end year, month, day, hour, minute and second).
- Setting register 11B2H to 2 configures the logging mode as Mode 3, which starts logging at a specific time and continues until the memory is full.
  - Only the start time is required to be set, and it can be configured in registers 11B4H-11B5H (hour and minute).

NOTE: For more details regarding the data logging function, please refer to the data logging section of Chapter 4.

Register: 11B3H-11B5H (start time)

11B6H-11B8H (end time)

Size: 2 Registers

Byte	0	1	2	3	4	5
Value	Month	Year	Hour	Day	Second	Minute

Log Status Block

The Log Status Block provides an overview of the current state of the relevant log.

Table 6-59 Data Log Status

Address(H)	Address(D)	Parameters	Range	Data Type	Property
6100H~6101H	24832~24833	Max records	0~468104	Dword	R
6102H~6103H	24834~24835	Used records	1~468104	Dword	R
6104H	24836	Record size	14~246	Word	R
6105H	24837	Reserved		Word	R
6106H~6108H	24838~24840	First record timestamp		Word	R
6109H~610BH	24841~24843	Last record timestamp		Word	R
6200H~620BH	25088~25099	Data Log 2 status	Same as Data Log 1		
6300H~630BH	25344~25355	Data Log 3 status	Same as Data Log 1		

Max Records: The maximum number of records the log can hold given the record size and sector allocation.

Used Records: The number of records stored within the log. This number will equal the Max Records when the log is at full capacity. This value will be set to 1 when the log is reset.

Record Size: The number of bytes in this record, including the timestamp. The format of the record within the meter consists of record number (4 bytes), timestamp (6 bytes), data1 to dataN (2N bytes), and CRC (2 bytes).

First Record Timestamp: Timestamp of the oldest record.

Last Record Timestamp: Timestamp of the newest record.

Log Retrieval Block

The log retrieval block consists of two parts: the header and the window. The header is used to verify the data shown within the requested log window. The window is a sliding block of data that can be used to access any record in the specified log.

Registers: 6000H-6003H

Distributed by MicroDAQ, LLC
(603) 746-5524
www.microdaq.com

Size: 4 Registers

Table 6-60 Long Retrieval Block

Address(H)	Address(D)	Parameters	Format	Property
6000H	24576	Log type	High byte: Log Type Historical Log 1: 0x0000 Historical Log 2: 0x0100 Historical Log 3: 0x0200	R/W
6400H	25600	Log type (log4)	Historical Log 4: 0x0300	R/W
6001H	24577	Record number and Status	High byte: Record Number Low byte: Status	R/W
6002H~6003H	24578~24579	Offset	Log1,Log2,Log3	R/W
6402H~6403H	25602~25603	Offset(log4)	Log4	R/W
6004H~607EH	24580~24702	Window	Log1,Log2,Log3	R
6404H~647EH	25604~25726	Window (log4)	Log4	R

Log type: The log to be retrieved. Assign one of the following values to indicate the desired log for retrieval.

0 - Historical Log 1

1 - Historical Log 2

2 - Historical Log 3

3 - Historical Log 4

Records number: The number of records that can fit within a window. It is adjustable and permits the use of any value that is less than the capacity of a full window. This number informs the retrieval program about the anticipated number of records to be fetched in the window. The calculation is as follows: (Record number x Record Size) = bytes used in the window. This value should be calculated as ((120 x 2) / Record Size), with the result rounded down. A larger value of this parameter corresponds to a faster retrieval speed.

For example, given a record size of 50, the Records number = ((120 x 2) / 50) ≈ 4.

Status: The status of the current window. Since the time to prepare a window may exceed an acceptable Modbus delay (1 second), this acts as a ready status flag to notify the users when the window is ready for retrieval. When this value indicates that the window is not ready, any data contained within the window should be ignored.

Window Status is Read-only, and any attempts to modify it will be disregarded.

This value also indicates the memory erasing status when configuring the date logging settings.

For Datalog 1, 2 and 3:

- 00H: Inactive
- BH Window is Ready
- FFH Window is Not Ready
- AAH Memory is Erasing
- BBH Memory Erasing is Finished
- CXH Register list is Set Error, for X:
  - Bit0 = 1, Register List Setting Error in Data Log 1

Distributed by MicroDAQ, LLC
(603) 746-5524
www.microdaq.com

- Bit1 = 1, Register List Setting Error in Data Log 2
- Bit2 = 1, Register List Setting Error in Data Log 3

For example, 0xC6H indicates that there are Register List Setting Error in both Data Log 2 and 3.

For Datalog 4:

- BH: Data Effective
- FFH: Data not Effective
- AAH: Data Log on Clearing
- BBH: Data Log Clearing End

Offset: The offset between the record number of the first record in the data window and the record number of the "first record timestamp". Setting this value determines the range of records that will be available in the data window. When the log is retrieved, the first (oldest) record is “latched.” Consequently, an offset of 0 will always point to the oldest record at the time of latching.

Window: The actual data of the records, organized according to the above settings.

NOTE: If the logging timer is disabled, the first recording sector will be erased once the log is full. Therefore, it is recommended that users refrain from attempting to read the entire log when the used record number is close to the maximum record number. In such instances, users should refer to the "Used Records" field and compare it with the previous "Used Records" field from the last reading before retrieving the information and reading the window.

In cases where the current "Used Records" field exceeds the "Used Records" field from the last reading and the "Offset" field is less than the difference between the current and previous "Used Records" field, it indicates that the first sector has been erased. In this scenario, the difference between the "Used Records" field should be subtracted from the record number. If the "Offset" field is greater than the difference between the current and previous "Used Records" field, the "Offset" number should be subtracted from the record number.

To avoid this situation, it is recommended to retrieve the log data before it reaches a state of near fullness.

For example: If Data Log 1 has 3 sectors and each has 448 records, the total records are 1344. If the user presses the "Read All" button when the "Used Records" number is at 1340 and the first sector is erased before the information is transferred to the computer, the data stored in this sector will be permanently erased and cannot be retrieved. If the records from the first sector are retrieved before it gets erased, the new value of "Offset" will equal to the original "Offset" field minus the value of the difference between the current and previous "Used Records" field.

Data logging operation examples

The following example illustrates the data logging operations. The example makes the following assumptions:

- The log is Historical Log 1.
- The log contains VAN, VBN, VCN (12 bytes), the interval is set to 1min, the sectors is set to 10, the registers is set to 6, and the logging timer function is disabled.
- Retrieval is starting at record offset 0 (oldest record).
- No new records are recorded to the log during the log retrieval process.

a) Data logging settings

Now set the Data Log 1 according to the assumptions:

- Set the data log with VAN, VBN, VCN: Set the Modbus addresses 0x1102, 0x1103, 0x1104, 0x1105, 0x1106, and 0x1107 to 0x4002,0x4003,0x4004,0x4005,0x4006, 0x4007, respectively. Since the descriptor for VAN, VBN, and VCN should be 2, set the Modbus addresses 0x1177 and 0x1178 to 0x0202 and 0x0200.
- The register is 6 and sector is 10, so set Modbus address 0x1100 to 0x060A.
- The interval is 1-minute, so set the Modbus address 0x1101 to 0x0001.
- The logging timer function is disabled, so set the Modbus address 0x11B9 to 0.

b) Log Retrieval Procedure

The following procedure demonstrates how to retrieve a single log from the oldest record to the newest record.

1. Compute the number of records per window. The number of records can be determined as follows:
2. RecordsPerWindow = (246 ÷ RecordSize) = 246 ÷ 24 ≈ 10
3. Configure the Records Per Window and Record Offset. For instance, set the Modbus address 0x6001 and 0x6002 to 0x0A0B and 0x0000, respectively. This action informs the meter about the data to be returned within the window.
4. Read the record window status from 0x6001.

- If the Window Status is 0xFF, return to step 2.
- If the Window Status is 0x0B, proceed to step 4.

5. Read the data window and compute the next Expected Record offset.

- Compute the next expected record offset by adding Records Per Window and return to step 2.
- If there are no remaining records after the current record window, stop reading.

6.3.19 Time-of-Use

Data Address of TOU Energy

The data address stores energy-related parameters, which include Data address of last month TOU energy, Data address of current month TOU energy, Data address of TOU parameter settings, and Data address of TOU default parameter. Except for the data address of TOU default parameter, the data address is read with function code 3 (03H) and pre-set with function code 16 (10H).

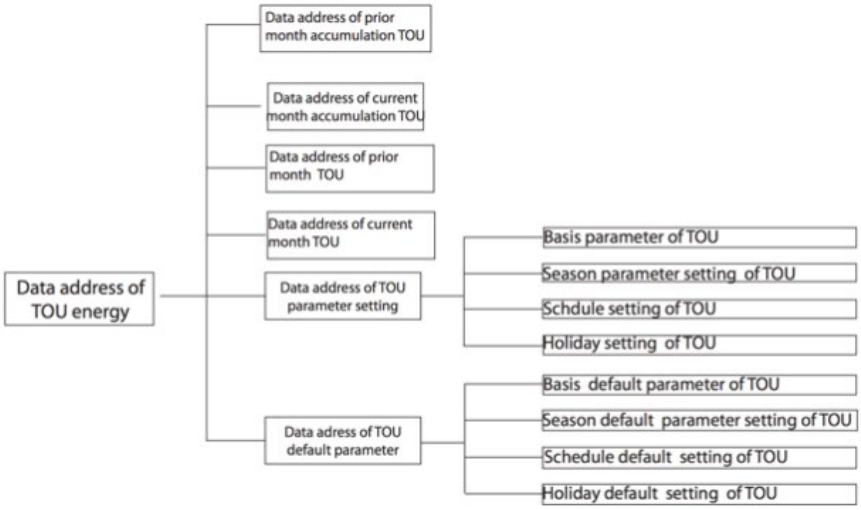

Fig 6-1 Division plan of TOU energy

Distributed by MicroDAQ, LLC
(603) 746-5524
www.microdaq.com

Table 6-61 Accumulative TOU Energy

Address(H)	Address(D)	Parameters	Range	Data Type	Type of Access
Current Month Accumulative TOU Energy					
7200H~7201H	29184~29185	Ep_imp (sharp)	0~999999999	Dword	R/W
7202H~7203H	29186~29187	Ep_exp (sharp)	0~999999999	Dword	R/W
7204H~7205H	29188~29189	Eq_imp (sharp)	0~999999999	Dword	R/W
7206H~7207H	29190~29191	Eq_exp (sharp)	0~999999999	Dword	R/W
7208H~7209H	29192~29193	Es (sharp)	0~999999999	Dword	R/W
720AH~720BH	29194~29195	Ep_imp (peak)	0~999999999	Dword	R/W
720CH~720DH	29196~29197	Ep_exp (peak)	0~999999999	Dword	R/W
720EH~720FH	29198~29199	Eq_imp (peak)	0~999999999	Dword	R/W
7210H~7211H	29200~29201	Eq_exp (peak)	0~999999999	Dword	R/W
7212H~7213H	29202~29203	Es (peak)	0~999999999	Dword	R/W
7214H~7215H	29204~29205	Ep_imp (valley)	0~999999999	Dword	R/W
7216H~7217H	29206~29207	Ep_exp (valley)	0~999999999	Dword	R/W
7218H~7219H	29208~29209	Eq_imp (valley)	0~999999999	Dword	R/W
721AH~721BH	29210~29211	Eq_exp (valley)	0~999999999	Dword	R/W
721CH~721DH	29212~29213	Es (valley)	0~999999999	Dword	R/W
721EH~721FH	29214~29215	Ep_imp (normal)	0~999999999	Dword	R/W
7220H~7221H	29216~29217	Ep_exp (normal)	0~999999999	Dword	R/W
7222H~7223H	29218~29219	Eq_imp (normal)	0~999999999	Dword	R/W
7224H~7225H	29220~29221	Eq_exp (normal)	0~999999999	Dword	R/W
7226H~7227H	29222~29223	Es (normal)	0~999999999	Dword	R/W
7228H~7229H	29224~29225	Ep_imp (sum)	0~999999999	Dword	R/W
722AH~722BH	29226~29227	Ep_exp (sum)	0~999999999	Dword	R/W
722CH~722DH	29228~29229	Eq_imp (sum)	0~999999999	Dword	R/W
722EH~722FH	29230~29231	Eq_exp (sum)	0~999999999	Dword	R/W
7230H~7231H	29232~29233	Es (sum)	0~999999999	Dword	R/W
Prior Month Accumulative TOU Energy					
7232H~7233H	29234~29235	Ep_imp (sharp)	0~999999999	Dword	R/W
7234H~7235H	29236~29237	Ep_exp (sharp)	0~999999999	Dword	R/W
7236H~7237H	29238~29239	Eq_imp (sharp)	0~999999999	Dword	R/W
7238H~7239H	29240~29241	Eq_exp (sharp)	0~999999999	Dword	R/W
723AH~723BH	29242~29243	Es (sharp)	0~999999999	Dword	R/W
723CH~723DH	29244~29245	Ep_imp (peak)	0~999999999	Dword	R/W
723EH~723FH	29246~29247	Ep_exp (peak)	0~999999999	Dword	R/W
7240H~7241H	29248~29249	Eq_imp (peak)	0~999999999	Dword	R/W
7242H~7243H	29250~29251	Eq_exp (peak)	0~999999999	Dword	R/W
7244H~7245H	29252~29253	Es (peak)	0~999999999	Dword	R/W
7246H~7247H	29254~29255	Ep_imp (valley)	0~999999999	Dword	R/W
7248H~7249H	29256~29257	Ep_exp (valley)	0~999999999	Dword	R/W
724AH~724BH	29258~29259	Eq_imp (valley)	0~999999999	Dword	R/W
724CH~724DH	29260~29261	Eq_exp (valley)	0~999999999	Dword	R/W
724EH~724FH	29262~29263	Es (valley)	0~999999999	Dword	R/W
7250H~7251H	29264~29265	Ep_imp (normal)	0~999999999	Dword	R/W
7252H~7253H	29266~29267	Ep_exp (normal)	0~999999999	Dword	R/W

Distributed by MicroDAQ, LLC
(603) 746-5524
www.microdaq.com

Address(H)	Address(D)	Parameters	Range	Data Type	Type of Access
7254H~7255H	29268~29269	Eq_imp (normal)	0~999999999	Dword	R/W
7256H~7257H	29270~29271	Eq_exp (normal)	0~999999999	Dword	R/W
7258H~7259H	29272~29273	Es (normal)	0~999999999	Dword	R/W
725AH~725BH	29274~29275	Ep_imp (sum)	0~999999999	Dword	R/W
725CH~725DH	29276~29277	Ep_exp (sum)	0~999999999	Dword	R/W
725EH~725FH	29278~29279	Eq_imp (sum)	0~999999999	Dword	R/W
7260H~7261H	20280~29281	Eq_exp (sum)	0~999999999	Dword	R/W
7262H~7263H	29282~29283	Es (sum)	0~999999999	Dword	R/W

Table 6-62 Incremental TOU Energy

Address(H)	Address(D)	Parameters	Range	Data Type	Type of Access
Current Month Incremental TOU Energy					
7300H~7301H	29440~29441	Ep_imp (sharp)	0~999999999	Dword	R/W
7302H~7303H	29442~29443	Ep_exp (sharp)	0~999999999	Dword	R/W
7304H~7305H	29444~29445	Eq_imp (sharp)	0~999999999	Dword	R/W
7306H~7307H	29446~29447	Eq_exp (sharp)	0~999999999	Dword	R/W
7308H~7309H	29448~29449	Es (sharp)	0~999999999	Dword	R/W
730AH~730BH	29450~29451	Ep_imp (peak)	0~999999999	Dword	R/W
730CH~730DH	29452~29453	Ep_exp (peak)	0~999999999	Dword	R/W
730EH~730FH	29454~29455	Eq_imp (peak)	0~999999999	Dword	R/W
7310H~7311H	29456~29457	Eq_exp (peak)	0~999999999	Dword	R/W
7312H~7313H	29458~29459	Es (peak)	0~999999999	Dword	R/W
7314H~7315H	29460~29461	Ep_imp (valley)	0~999999999	Dword	R/W
7316H~7317H	29462~29463	Ep_exp (valley)	0~999999999	Dword	R/W
7318H~7319H	29464~29465	Eq_imp (valley)	0~999999999	Dword	R/W
731AH~731BH	29466~29467	Eq_exp (valley)	0~999999999	Dword	R/W
731CH~731DH	29468~29469	Es (valley)	0~999999999	Dword	R/W
731EH~731FH	29470~29471	Ep_imp (normal)	0~999999999	Dword	R/W
7320H~7321H	29472~29473	Ep_exp (normal)	0~999999999	Dword	R/W
7322H~7323H	29474~29475	Eq_imp (normal)	0~999999999	Dword	R/W
7324H~7325H	29476~29477	Eq_exp (normal)	0~999999999	Dword	R/W
7326H~7327H	29478~29479	Es (normal)	0~999999999	Dword	R/W
7328H~7329H	29480~29481	Ep_imp (sum)	0~999999999	Dword	R/W
732AH~732BH	29482~29483	Ep_exp (sum)	0~999999999	Dword	R/W
732CH~732DH	29484~29485	Eq_imp (sum)	0~999999999	Dword	R/W
732EH~732FH	29486~29487	Eq_exp (sum)	0~999999999	Dword	R/W
7330H~7331H	29488~29489	Es (sum)	0~999999999	Dword	R/W
Prior Month Incremental TOU Energy					
7332H~7333H	29490~29491	Ep_imp (sharp)	0~999999999	Dword	R/W
7334H~7335H	29492~29493	Ep_exp (sharp)	0~999999999	Dword	R/W
7336H~7337H	29494~29495	Eq_imp (sharp)	0~999999999	Dword	R/W
7338H~7339H	29496~29497	Eq_exp (sharp)	0~999999999	Dword	R/W
733AH~733BH	29498~29499	Es (sharp)	0~999999999	Dword	R/W
733CH~733DH	29500~29501	Ep_imp (sharp)	0~999999999	Dword	R/W

Distributed by MicroDAQ, LLC
(603) 746-5524
www.microdaq.com

Address(H)	Address(D)	Parameters	Range	Data Type	Type of Access
733EH~733FH	29502~29503	Ep_exp (sharp)	0~999999999	Dword	R/W
7340H~3241H	29504~29505	Eq_imp (sharp)	0~999999999	Dword	R/W
7342H~7343H	29506~29507	Eq_exp (sharp)	0~999999999	Dword	R/W
7344H~7345H	29508~29509	Es (sharp)	0~999999999	Dword	R/W
7346H~7347H	29510~29511	Ep_imp (sharp)	0~999999999	Dword	R/W
7348H~7349H	29512~29513	Ep_exp (sharp)	0~999999999	Dword	R/W
734AH~734BH	29514~25915	Eq_imp (sharp)	0~999999999	Dword	R/W
734CH~734DH	29516~29517	Eq_exp (sharp)	0~999999999	Dword	R/W
734EH~734FH	29518~29219	Es (sharp)	0~999999999	Dword	R/W
7350H~7351H	29220~29221	Ep_imp (sharp)	0~999999999	Dword	R/W
7352H~7353H	29222~29223	Ep_exp (sharp)	0~999999999	Dword	R/W
7354H~7355H	29224~29225	Eq_imp (sharp)	0~999999999	Dword	R/W
7356H~7357H	29226~29227	Eq_exp (sharp)	0~999999999	Dword	R/W
7358H~7359H	29228~292291	Es (sharp)	0~999999999	Dword	R/W
735AH~735BH	29230~29231	Ep_imp (sharp)	0~999999999	Dword	R/W
735CH~735DH	29232~29233	Ep_exp (sharp)	0~999999999	Dword	R/W
735EH~735FH	29234~29235	Eq_imp (sharp)	0~999999999	Dword	R/W
7360H~7361H	29236~29237	Eq_exp (sharp)	0~999999999	Dword	R/W
7362H~7363H	29538~29539	Es (sharp)	0~999999999	Dword	R/W

The following address area includes the maximum demand and corresponding timestamps of Ep_imp, Ep_exp, Eq_imp, Eq_exp, Es, and three phase current in Current and Prior Month TOU, when tariff setting parameters are sharp, peak, valley, and normal.

Function code: 03H Read.

Table 6-63 Current Month TOU Max Demand

Address(H)	Address(D)	Parameters	Range	Data Type	Type of Access
7500H~7503H	29952~29955	Max of Ep_imp (sharp) demand and timestamp (format: power; year/mon; Day/Hour; Min/Sec)	-32768~32767	Int	R
7504H~7507H	29956~29959	Max of Ep_exp (sharp) demand and timestamp	-32768~32767	Int	R
7508H~750BH	29960~29963	Max of Eq_imp (sharp) demand and timestamp	-32768~32767	Int	R
750CH~750FH	29964~29967	Max of Eq_exp (sharp) demand and timestamp	-32768~32767	Int	R
7510H~7513H	29968~29971	Max of Es (sharp) demand and timestamp	-32768~32767	Int	R
7514H~7517H	29972~29975	Max of Ia (sharp) demand and timestamp	-32768~32767	Int	R
7518H~751BH	29976~29979	Max of Ib (sharp) demand and timestamp	-32768~32767	Int	R
751CH~751FH	29980~29983	Max of Ic (sharp) demand and timestamp	-32768~32767	Int	R
7520H~7523H	29984~29987	Max of Ep_imp (peak) demand and timestamp	-32768~32767	Int	R
7524H~7527H	29988~29991	Max of Ep_exp (peak) demand and timestamp	-32768~32767	Int	R
7528H~752BH	29992~29995	Max of Eq_imp (peak) demand and timestamp	-32768~32767	Int	R
752CH~752FH	29996~29999	Max of Eq_exp (peak) demand and timestamp	-32768~32767	Int	R
7530H~7533H	30000~30003	Max of Es (peak) demand and timestamp	-32768~32767	Int	R
7534H~7537H	30004~30007	Max of Ia (peak) demand and timestamp	-32768~32767	Int	R

Address(H)	Address(D)	Parameters	Range	Data Type	Type of Access
7538H~753BH	30008~30011	Max of Ib (peak) demand and timestamp	-32768~32767	Int	R
753CH~753FH	30012~30015	Max of Ic (peak) demand and timestamp	-32768~32767	Int	R
7540H~7543H	30016~30019	Max of Ep_imp (valley) demand and timestamp	-32768~32767	Int	R
7544H~7547H	30020~30023	Max of Ep_exp (valley) demand and timestamp	-32768~32767	Int	R
7548H~754BH	30024~30027	Max of Eq_imp (valley) demand and timestamp	-32768~32767	Int	R
754CH~754FH	30028~30031	Max of Eq_exp (valley) demand and timestamp	-32768~32767	Int	R
7550H~7553H	30032~30035	Max of Es (valley) demand and timestamp	-32768~32767	Int	R
7554H~7557H	30036~30039	Max of Ia (valley) demand and timestamp	-32768~32767	Int	R
7558H~755BH	30040~30043	Max of Ib (valley) demand and timestamp	-32768~32767	Int	R
755CH~755FH	30044~30047	Max of Ic (valley) demand and timestamp	-32768~32767	Int	R
7560H~7563H	30048~30051	Max of Ep_imp (normal) demand and timestamp	-32768~32767	Int	R
7564H~7567H	30052~30055	Max of Ep_exp (normal) demand and timestamp	-32768~32767	Int	R
7568H~756BH	30056~30059	Max of Eq_imp (normal) demand and timestamp	-32768~32767	Int	R
756CH~756FH	30060~30063	Max of Eq_exp (normal) demand and timestamp	-32768~32767	Int	R
7570H~7573H	30064~30067	Max of Es (normal) demand and timestamp	-32768~32767	Int	R
7574H~7577H	30068~30071	Max of Ia (normal) demand and timestamp	-32768~32767	Int	R
7578H~757BH	30072~30075	Max of Ib (normal) demand and timestamp	-32768~32767	Int	R
757CH~757FH	30076~30079	Max of Ic (normal) demand and timestamp	-32768~32767	Int	R
7580H~7583H	30080~30083	Max of Ep_imp (all) demand and timestamp	-32768~32767	Int	R
7584H~7587H	30084~30087	Max of Ep_exp (all) demand and timestamp	-32768~32767	Int	R
7588H~758BH	30088~30091	Max of Eq_imp (all) demand and timestamp	-32768~32767	Int	R
758CH~758FH	30092~30095	Max of Eq_exp (all) demand and timestamp	-32768~32767	Int	R
7590H~7593H	30096~30099	Max of Es (all) demand and timestamp	-32768~32767	Int	R
7594H~7597H	30100~30103	Max of Ia (all) demand and timestamp	-32768~32767	Int	R
7598H~759BH	30104~30107	Max of Ib (all) demand and timestamp	-32768~32767	Int	R
759CH~759FH	30108~30111	Max of Ic (all) demand and timestamp	-32768~32767	Int	R

Table 6-64 Prior Month TOU Max Demand

Address(H)	Address(D)	Parameters	Range	Data Type	Type of Access
7600H~7603H	30208~30211	Max of Ep_imp (sharp) demand and timestamp (format: power; year/mon; Day/Hour; Min/Sec)	-32768~32767	Int	R
7604H~7607H	30212~30215	Max of Ep_exp (sharp) demand and timestamp	-32768~32767	Int	R
7608H~760BH	30216~30219	Max of Eq_imp (sharp) demand and timestamp	-32768~32767	Int	R
760CH~760FH	30220~30223	Max of Eq_exp (sharp) demand and timestamp	-32768~32767	Int	R
7610H~7613H	30224~30227	Max of Es (sharp) demand and timestamp	-32768~32767	Int	R
7614H~7617H	30228~30231	Max of Ia (sharp) demand and timestamp	-32768~32767	Int	R
7618H~761BH	30232~30235	Max of Ib (sharp) demand and timestamp	-32768~32767	Int	R
761CH~761FH	30236~30239	Max of Ic (sharp) demand and timestamp	-32768~32767	Int	R
7620H~7623H	30240~30243	Max of Ep_imp (peak) demand and timestamp	-32768~32767	Int	R

Distributed by MicroDAQ, LLC
(603) 746-5524
www.microdaq.com

Address(H)	Address(D)	Parameters	Range	Data Type	Type of Access
7624H~7627H	30244~30247	Max of Ep_exp (peak) demand and timestamp	-32768~32767	Int	R
7628H~762BH	30248~30251	Max of Eq_imp (peak) demand and timestamp	-32768~32767	Int	R
762CH~762FH	30252~30255	Max of Eq_exp (peak) demand and timestamp	-32768~32767	Int	R
7630H~7633H	30256~30259	Max of Es (peak) demand and timestamp	-32768~32767	Int	R
7634H~7637H	30260~30263	Max of Ia (peak) demand and timestamp	-32768~32767	Int	R
7638H~763BH	30264~30267	Max of Ib (peak) demand and timestamp	-32768~32767	Int	R
763CH~763FH	30268~30271	Max of Ic (peak) demand and timestamp	-32768~32767	Int	R
7640H~7643H	30272~30275	Max of Ep_imp (valley) demand and timestamp	-32768~32767	Int	R
7644H~7647H	30276~30279	Max of Ep_exp (valley) demand and timestamp	-32768~32767	Int	R
7648H~764BH	30280~30283	Max of Eq_imp (valley) demand and timestamp	-32768~32767	Int	R
764CH~764FH	30284~30287	Max of Eq_exp (valley) demand and timestamp	-32768~32767	Int	R
7650H~7653H	30288~30291	Max of Es (valley) demand and timestamp	-32768~32767	Int	R
7654H~7657H	30292~30295	Max of Ia (valley) demand and timestamp	-32768~32767	Int	R
7658H~765BH	30296~30299	Max of Ib (valley) demand and timestamp	-32768~32767	Int	R
765CH~765FH	30300~30303	Max of Ic (valley) demand and timestamp	-32768~32767	Int	R
7660H~7663H	30304~30307	Max of Ep_imp (normal) demand and timestamp	-32768~32767	Int	R
7664H~7667H	30308~30311	Max of Ep_exp (normal) demand and timestamp	-32768~32767	Int	R
7668H~766BH	30312~30315	Max of Eq_imp (normal) demand and timestamp	-32768~32767	Int	R
766CH~766FH	30316~30319	Max of Eq_exp (normal) demand and timestamp	-32768~32767	Int	R
7670H~7673H	30320~30323	Max of Es (normal) demand and timestamp	-32768~32767	Int	R
7674H~7677H	30324~30327	Max of Ia (normal) demand and timestamp	-32768~32767	Int	R
7678H~767BH	30328~30331	Max of Ib (normal) demand and timestamp	-32768~32767	Int	R
767CH~767FH	30332~30335	Max of Ic (normal) demand and timestamp	-32768~32767	Int	R
7680H~7683H	30336~30339	Max of Ep_imp (all) demand and timestamp	-32768~32767	Int	R
7684H~7687H	30340~30343	Max of Ep_exp (all) demand and timestamp	-32768~32767	Int	R
7688H~768BH	30344~30347	Max of Eq_imp (all) demand and timestamp	-32768~32767	Int	R
768CH~768FH	30348~30351	Max of Eq_exp (all) demand and timestamp	-32768~32767	Int	R
7690H~7693H	30352~30355	Max of Es (all) demand and timestamp	-32768~32767	Int	R
7694H~7697H	30356~30359	Max of Ia (all) demand and timestamp	-32768~32767	Int	R
7698H~769BH	30360~30363	Max of Ib (all) demand and timestamp	-32768~32767	Int	R
769CH~769FH	30364~30367	Max of Ic (all) demand and timestamp	-32768~32767	Int	R

The address area includes Daylight savings time (DST) setting.

Function code: 03H Read, 10H Pre-set.

Table 6-65 Daylight Savings Time (DST) Settings

Address(H)	Address(D)	Parameters	Range	Data Type	Type of Access
7700H	30464	DST enable	0: Disable 1: Enable	Word	R/W
7701H	30465	DST format	0: Format 1 1: Format 2	Word	R/W
Format 1: Fixed Date					

Address(H)	Address(D)	Parameters	Range	Data Type	Type of Access
7702H	30466	DST start Month	1~12	Word	R/W
7703H	30467	DST start Day	1~31	Word	R/W
7704H	30468	DST start Hour	0~23	Word	R/W
7705H	30469	DST start Minute	0~59	Word	R/W
7706H	30470	DST start adjust time (Unit: Min)	1~120 (Default: 60)	Word	R/W
7707H	30471	DST ending Month	1~12	Word	R/W
7708H	30472	DST ending Day	1~31	Word	R/W
7709H	30473	DST ending Hour	0~23	Word	R/W
770AH	30474	DST ending Minute	0~59	Word	R/W
770BH	30475	DST ending adjust time (Unit: Min)	1~120 (Default: 60)	Word	R/W
Format 2: Non-Fixed Date					
770CH	30476	DST start Month	1~12	Word	R/W
770DH	30477	DST start Day of the Week	0: Sunday 1~6: Monday to Saturday	Word	R/W
770EH	30478	DST start Week	1~5	Word	R/W
770FH	30479	DST start Hour	0~23	Word	R/W
7710H	30480	DST start Minute	0~59	Word	R/W
7711H	30481	DST start adjust time (Unit: Min)	1~120 (Default: 60)	Word	R/W
7712H	30482	DST ending Month	1~12	Word	R/W
7713H	30483	DST ending Day of the Week	0: Sunday 1~6: Monday to Saturday	Word	R/W
7714H	30484	DST ending Week	1~5	Word	R/W
7715H	30485	DST ending Hour	0~23	Word	R/W
7716H	30486	DST ending Minute	0~59	Word	R/W
7717H	30487	DST ending adjust time (Unit: Min)	1~120 (Default: 60)	Word	R/W

The data addresses associated with TOU parameter settings include basis parameters of TOU, time zone setting parameters of TOU, timetable setting parameters of TOU, and holiday setting parameters of TOU.

Function code: 03H Read, 10H Pre-set.

Table 6-66 TOU Parameter Settings

Address(H)	Address(D)	Parameters	Range	Data Type	Type of Access
Basis Parameter of TOU					
7800H	30720	Season number	0~12	Word	R/W
7801H	30721	Schedule number	0~14	Word	R/W
7802H	30722	Segment number	0~14	Word	R/W
7803H	30723	Tariff number	0~3	Word	R/W

Distributed by MicroDAQ, LLC
(603) 746-5524
www.microdaq.com

Address(H)	Address(D)	Parameters	Range	Data Type	Type of Access
7804H	30724	Weekend setting bit0: Sunday bit 1~bit6: Monday~Saturday 1: Weekend 0: Not Weekend)	0~127	Word	R/W
7805H	30725	Weekend schedule	0~14	Word	R/W
7806H	30726	Holiday number	0~30	Word	R/W
7807H	30727	Enable TOU	1: Enable	Word	R/W
7808H	30728	Restore Factory Settings	1: Restore	Word	R/W
7809H	30729	Monthly Billing Mode	0: End of Month 1: Assign Billing Date	Word	R/W
780AH	30730	TOU auto reset fixed date: Day (default is 1)	1~31	Word	R/W
780BH	30731	TOU auto reset fixed date: Hour (default is 0)	0~23	Word	R/W
780CH	30732	TOU auto reset fixed date: Minute (default is 0)	0~59	Word	R/W
780DH	30733	TOU auto reset fixed date: Second (default is 0)	0~59	Word	R/W
780EH	30734	Error code (default is 0)	0: Setting Correct 1: Tariff Setting Error 2: Schedule Setting Error 4: Segment Setting Error 8: Season Setting Error 16: Parameter of Season Setting Error 32: Holiday Setting Error 64: Parameter of Holiday Setting Error 256: Tariff of Schedule Setting Error 512: Time of Schedule Setting Error 1024: Period of Schedule Setting Error 2048: Period of Weekend Setting Error 4096: Weekend Setting Error	Word	R/W
Season Setting					
7820H~7822H	30752~30754	Data and season table of the 1st season (format: month, day, schedule ID)		Word	R/W
7823H~7825H	30755~30757	Data and season table of the 2nd season (format: month, day, schedule ID)		Word	R/W
7826H~7828H	30758~30760	Data and season table of the 3rd season (format: month, day, schedule ID)		Word	R/W
7829H~782BH	30761~30763	Data and season table of the 4th season (format: month, day, schedule ID)		Word	R/W
782CH~782EH	30764~30766	Data and season table of the 5th season (format: month, day, schedule ID)		Word	R/W

Address(H)	Address(D)	Parameters	Range	Data Type	Type of Access
782FH~7831H	30767~30769	Data and season table of the 6th season (format: month, day, schedule ID)		Word	R/W
7832H~7834H	30770~30772	Data and season table of the 7th season (format: month, day, schedule ID)		Word	R/W
7835H~7837H	30773~30775	Data and season table of the 8th season (format: month, day, schedule ID)		Word	R/W
7838H~783AH	30776~30778	Data and season table of the 9th season (format: month, day, schedule ID)		Word	R/W
783BH~783DH	30779~30781	Data and season table of the 10th season (format: month, day, schedule ID)		Word	R/W
783EH~7840H	30782~30784	Data and season table of the 11th season (format: month, day, schedule ID)		Word	R/W
7841H~7843H	30785~30787	Data and season table of the 12th season (format: month, day, schedule ID)		Word	R/W
Schedule Setting					
7844H~7846H	30788~30790	1st segment and tariff number of the 1st schedule (format: hour, minute, segment ID)		Word	R/W
7847H~7849H	30791~30793	2nd segment and tariff number of the 1st schedule (format: hour, minute, segment ID)		Word	R/W
784AH~784CH	30794~30796	3rd segment and tariff number of the 1st schedule (format: hour, minute, segment ID)		Word	R/W
784DH~784FH	30797~30799	4th segment and tariff number of the 1st schedule (format: hour, minute, segment ID)		Word	R/W
7850H~7852H	30800~30802	5th segment and tariff number of the 1st schedule (format: hour, minute, segment ID)		Word	R/W
7853H~7855H	30803~30805	6th segment and tariff number of the 1st schedule (format: hour, minute, segment ID)		Word	R/W
7856H~7858H	30806~30808	7th segment and tariff number of the 1st schedule (format: hour, minute, segment ID)		Word	R/W
7859H~785BH	30809~30811	8th segment and tariff number of the 1st schedule (format: hour, minute, segment ID)		Word	R/W
785CH~785EH	30812~30814	9th segment and tariff number of the 1st schedule (format: hour, minute, segment ID)		Word	R/W
785FH~7861H	30815~30817	10th segment and tariff number of the 1st schedule (format: hour, minute, segment ID)		Word	R/W
7862H~7864H	30818~30820	11th segment and tariff number of the 1st schedule (format: hour, minute, segment ID)		Word	R/W
7865H~7867H	30821~30823	12th segment and tariff number of the 1st schedule (format: hour, minute, segment ID)		Word	R/W
7868H~786AH	30824~30826	13th segment and tariff number of the 1st schedule (format: hour, minute, segment ID)		Word	R/W
786BH~786DH	30827~30829	14th segment and tariff number of the 1st schedule (format: hour, minute, segment ID)		Word	R/W
786EH~7897H	30830~30871	From 1st to 14th segment and tariff number of the 2nd schedule	The same as the 1st schedule	Word	R/W
7898H~78C1H	30872~30913	From 1st to 14th segment and tariff number of the 3rd schedule	The same as the 1st schedule	Word	R/W

Distributed by MicroDAQ, LLC
(603) 746-5524
www.microdaq.com

Address(H)	Address(D)	Parameters	Range	Data Type	Type of Access
78C2H~78EBH	30914~30955	From 1st to 14th segment and tariff number of the 4th schedule	The same as the 1st schedule	Word	R/W
78ECH~7915H	30956~30997	From 1st to 14th segment and tariff number of the 5th schedule	The same as the 1st schedule	Word	R/W
7916H~793FH	30998~31039	From 1st to 14th segment and tariff number of the 6th schedule	The same as the 1st schedule	Word	R/W
7940H~7969H	31040~31081	From 1st to 14th segment and tariff number of the 7th schedule	The same as the 1st schedule	Word	R/W
796AH~7993H	31082~31123	From 1st to 14th segment and tariff number of the 8th schedule	The same as the 1st schedule	Word	R/W
7994H~79BDH	31124~31165	From 1st to 14th segment and tariff number of the 9th schedule	The same as the 1st schedule	Word	R/W
79BEH~79E7H	31166~31207	From 1st to 14th segment and tariff number of the 10th schedule	The same as the 1st schedule	Word	R/W
79E8H~7A11H	31208~31249	From 1st to 14th segment and tariff number of the 11th schedule	The same as the 1st schedule	Word	R/W
7A12H~7A3BH	31250~31291	From 1st to 14th segment and tariff number of the 12th schedule	The same as the 1st schedule	Word	R/W
7A3CH~7A65H	31292~31333	From 1st to 14th segment and tariff number of the 13th schedule	The same as the 1st schedule	Word	R/W
7A66H~7A8FH	31334~31375	From 1st to 14th segment and tariff number of the 14th schedule	The same as the 1st schedule	Word	R/W
Holiday setting					
7A90H~7A92H	31376~31378	Data and the schedule of the 1st holiday (format: month, day, schedule ID)		Word	R/W
7A93H~7A95H	31379~31381	Data and the schedule of the 2nd holiday (format: month, day, schedule ID)		Word	R/W
7A96H~7A98H	31382~31384	Data and the schedule of the 3rd holiday (format: month, day, schedule ID)		Word	R/W
7A99H~7A9BH	31385~31387	Data and the schedule of the 4th holiday (format: month, day, schedule ID)		Word	R/W
7A9CH~7A9EH	31388~31390	Data and the schedule of the 5th holiday (format: month, day, schedule ID)		Word	R/W
7A9FH~7AA1H	31391~31393	Data and the schedule of the 6th holiday (format: month, day, schedule ID)		Word	R/W
7AA2H~7AA4H	31394~31396	Data and the schedule of the 7th holiday (format: month, day, schedule ID)		Word	R/W
7AA5H~7AA7H	31397~31399	Data and the schedule of the 8th holiday (format: month, day, schedule ID)		Word	R/W
7AA8H~7AAAH	31400~31402	Data and the schedule of the 9th holiday (format: month, day, schedule ID)		Word	R/W
7AABH~7AADH	31403~31405	Data and the schedule of the 10th holiday (format: month, day, schedule ID)		Word	R/W
7AAEH~7AB0H	31406~31408	Data and the schedule of the 11th holiday (format: month, day, schedule ID)		Word	R/W
7AB1H~7AB3H	31409~31411	Data and the schedule of the 12th holiday (format: month, day, schedule ID)		Word	R/W
7AB4H~7AB6H	31412~31414	Data and the schedule of the 13th holiday (format: month, day, schedule ID)		Word	R/W
7AB7H~7AB9H	31415~31417	Data and the schedule of the 14th holiday (format: month, day, schedule ID)		Word	R/W
7ABAH~7ABCH	31418~31420	Data and the schedule of the 15th holiday (format: month, day, schedule ID)		Word	R/W
7ABDH~7ABFH	31421~31423	Data and the schedule of the 16th holiday (format: month, day, schedule ID)		Word	R/W

Distributed by MicroDAQ, LLC
(603) 746-5524
www.microdaq.com

Address(H)	Address(D)	Parameters	Range	Data Type	Type of Access
7AC0H~7AC2H	31424~31426	Data and the schedule of the 17th holiday (format: month, day, schedule ID)		Word	R/W
7AC3H~7AC5H	31427~31429	Data and the schedule of the 18th holiday (format: month, day, schedule ID)		Word	R/W
7AC6H~7AC8H	31430~31432	Data and the schedule of the 19th holiday (format: month, day, schedule ID)		Word	R/W
7AC9H~7ACBH	31433~31435	Data and the schedule of the 20th holiday (format: month, day, schedule ID)		Word	R/W
7ACCH~7ACEH	31436~31438	Data and the schedule of the 21st holiday (format: month, day, schedule ID)		Word	R/W
7ACFH~7AD1H	31439~31441	Data and the schedule of the 22nd holiday (format: month, day, schedule ID)		Word	R/W
7AD2H~7AD4H	31442~31444	Data and the schedule of the 23rd holiday (format: month, day, schedule ID)		Word	R/W
7AD5H~7AD7H	31445~31447	Data and the schedule of the 24th holiday (format: month, day, schedule ID)		Word	R/W
7AD8H~7ADAH	31448~31450	Data and the schedule of the 25th holiday (format: month, day, schedule ID)		Word	R/W
7ADBH~7ADDH	31451~31453	Data and the schedule of the 26th holiday (format: month, day, schedule ID)		Word	R/W
7ADEH~7AE0H	31454~31456	Data and the schedule of the 27th holiday (format: month, day, schedule ID)		Word	R/W
7AE1H~7AE3H	31457~31459	Data and the schedule of the 28th holiday (format: month, day, schedule ID)		Word	R/W
7AE4H~7AE6H	31460~31462	Data and the schedule of the 29th holiday (format: month, day, schedule ID)		Word	R/W
7AE7H~7AE9H	31463~31465	Data and the schedule of the 30th holiday (format: month, day, schedule ID)		Word	R/W
7AEAH	31466	Holiday setting enable		Word	R/W
7AEBH	31467	Start year holiday setting		Word	R/W
7AECH	31468	End year holiday setting		Word	R/W

The addresses below are associated with ten years holiday settings.

Function code: 03H Read 10H Pre-set.

Table 6-67 10 Years Holiday Settings (Year 1)

The 1st Year Holiday Address Function: 03H Read 10H Preset				
Address(H)	**Address(D)**	**Parameters**	**Data Type**	**Type of Access**
7B00H~7B02H	31488~31490	The 1st holiday and schedule (format: month/day/schedule)	Word	R/W
7B03H~7B05H	31491~31493	The 2nd holiday and schedule	Word	R/W
7B06H~7B08H	31494~31496	The 3rd holiday and schedule	Word	R/W
7B09H~7B0BH	31497~31499	The 4th holiday and schedule	Word	R/W
7B0CH~7B0EH	31500~31502	The 5th holiday and schedule	Word	R/W
7B0FH~7B11H	31503~31505	The 6th holiday and schedule	Word	R/W
7B12H~7B14H	31506~31508	The 7th holiday and schedule	Word	R/W
7B15H~7B17H	31509~31511	The 8th holiday and schedule	Word	R/W

Distributed by MicroDAQ, LLC
(603) 746-5524
www.microdaq.com

The 1st Year Holiday Address Function: 03H Read 10H Preset				
Address(H)	**Address(D)**	**Parameters**	**Data Type**	**Type of Access**
7B18H~7B1AH	31512~31514	The 9th holiday and schedule	Word	R/W
7B1BH~7B1DH	31515~31517	The 10th holiday and schedule	Word	R/W
7B1EH~7B20H	31518~31520	The 11th holiday and schedule	Word	R/W
7B21H~7B23H	31521~31523	The 12th holiday and schedule	Word	R/W
7B24H~7B26H	31524~31526	The 13th holiday and schedule	Word	R/W
7B27H~7B29H	31527~31529	The 14th holiday and schedule	Word	R/W
7B2AH~7B2CH	31530~31532	The 15th holiday and schedule	Word	R/W
7B2DH~7B2FH	31533~31535	The 16th holiday and schedule	Word	R/W
7B30H~7B32H	31536~31538	The 17th holiday and schedule	Word	R/W
7B33H~7B35H	31539~31541	The 18th holiday and schedule	Word	R/W
7B36H~7B38H	31542~31544	The 19th holiday and schedule	Word	R/W
7B39H~7B3BH	31545~31547	The 20th holiday and schedule	Word	R/W
7B3CH~7B3EH	31548~31550	The 21st holiday and schedule	Word	R/W
7B3FH~7B41H	31551~31553	The 22nd holiday and schedule	Word	R/W
7B42H~7B44H	31554~31556	The 23rd holiday and schedule	Word	R/W
7B45H~7B47H	31557~31559	The 24th holiday and schedule	Word	R/W
7B48H~7B4AH	31560~31562	The 25th holiday and schedule	Word	R/W
7B4BH~7B4DH	31563~31565	The 26th holiday and schedule	Word	R/W
7B4EH~7B50H	31566~31568	The 27th holiday and schedule	Word	R/W
7B51H~7B53H	31569~31571	The 28th holiday and schedule	Word	R/W
7B54H~7B56H	31572~31574	The 29th holiday and schedule	Word	R/W
7B57H~7B59H	31575~31577	The 30th holiday and schedule	Word	R/W
7B5AH	31578	The 1st setting year	Word	R/W
7B5BH	31579	Holiday number of the 1st year	Word	R/W

Table 6-68 10 Years Holiday Settings (Year 2)

The 2nd Year Holiday Address Function: 03H Read 10H Preset				
Address(H)	**Address(D)**	**Parameters**	**Data Type**	**Type of Access**
7B5CH~7B5EH	31580~31582	The 1st holiday and schedule (format: month/day/schedule)	Word	R/W
7B5FH~7B61H	31583~31585	The 2nd holiday and schedule	Word	R/W
7B62H~7B64H	31586~31588	The 3rd holiday and schedule	Word	R/W
7B65H~7B67H	31589~31591	The 4th holiday and schedule	Word	R/W
7B68H~7B6AH	31592~31594	The 5th holiday and schedule	Word	R/W
7B6BH~7B6DH	31595~31597	The 6th holiday and schedule	Word	R/W
7B6EH~7B70H	31598~31600	The 7th holiday and schedule	Word	R/W
7B71H~7B73H	31601~31603	The 8th holiday and schedule	Word	R/W
7B74H~7B76H	31604~31606	The 9th holiday and schedule	Word	R/W
7B77H~7B79H	31607~31609	The 10th holiday and schedule	Word	R/W
7B7AH~7B7CH	31610~31612	The 11th holiday and schedule	Word	R/W
7B7DH~7B7FH	31613~31615	The 12th holiday and schedule	Word	R/W
7B80H~7B82H	31616~31618	The 13th holiday and schedule	Word	R/W
7B83H~7B85H	31619~31621	The 14th holiday and schedule	Word	R/W

The 2nd Year Holiday Address Function: 03H Read 10H Preset				
Address(H)	**Address(D)**	**Parameters**	**Data Type**	**Type of Access**
7B86H~7B88H	31622~31624	The 15th holiday and schedule	Word	R/W
7B89H~7B8BH	31625~31627	The 16th holiday and schedule	Word	R/W
7B8CH~7B8EH	31628~31630	The 17th holiday and schedule	Word	R/W
7B8FH~7B91H	31631~31633	The 18th holiday and schedule	Word	R/W
7B92H~7B94H	31634~31636	The 19th holiday and schedule	Word	R/W
7B95H~7B97H	31637~31639	The 20th holiday and schedule	Word	R/W
7B98H~7B9AH	31640~31642	The 21st holiday and schedule	Word	R/W
7B9BH~7B9DH	31643~31645	The 22nd holiday and schedule	Word	R/W
7B9EH~7BA0H	31646~31648	The 23rd holiday and schedule	Word	R/W
7BA1H~7BA3H	31649~31651	The 24th holiday and schedule	Word	R/W
7BA4H~7BA6H	31652~31654	The 25th holiday and schedule	Word	R/W
7BA7H~7BA9H	31655~31657	The 26th holiday and schedule	Word	R/W
7BAAH~7BACH	31658~31660	The 27th holiday and schedule	Word	R/W
7BADH~7BAFH	31661~31663	The 28th holiday and schedule	Word	R/W
7BB0H~7BB2H	31664~31666	The 29th holiday and schedule	Word	R/W
7BB3H~7BB5H	31667~31669	The 30th holiday and schedule	Word	R/W
7BB6H	31670	The 2nd setting year	Word	R/W
7BB7H	31671	Holiday number of the 2nd year	Word	R/W

Table 6-69 10 Years Holiday Settings (Year 3)

The 3rd Year Holiday Address Function: 03H Read 10H Preset				
Address(H)	**Address(D)**	**Parameters**	**Data Type**	**Type of Access**
7BB8H~7BBAH	31672~31674	The 1st holiday and schedule (format: month/day/schedule)	Word	R/W
7BBBH~7BBDH	31675~31677	The 2nd holiday and schedule	Word	R/W
7BBEH~7BC0H	31678~31680	The 3rd holiday and schedule	Word	R/W
7BC1H~7BC3H	31681~31683	The 4th holiday and schedule	Word	R/W
7BC4H~7BC6H	31684~31686	The 5th holiday and schedule	Word	R/W
7BC7H~7BC9H	31687~31689	The 6th holiday and schedule	Word	R/W
7BCAH~7BCCH	31690~31692	The 7th holiday and schedule	Word	R/W
7BCDH~7BCFH	31693~31695	The 8th holiday and schedule	Word	R/W
7BD0H~7BD2H	31696~31698	The 9th holiday and schedule	Word	R/W
7BD3H~7BD5H	31699~31701	The 10th holiday and schedule	Word	R/W
7BD6H~7BD8H	31702~31704	The 11th holiday and schedule	Word	R/W
7BD9H~7BDBH	31705~31707	The 12th holiday and schedule	Word	R/W
7BDCH~7BDEH	31708~31710	The 13th holiday and schedule	Word	R/W
7BDFH~7BE1H	31711~31713	The 14th holiday and schedule	Word	R/W
7BE2H~7BE4H	31714~31716	The 15th holiday and schedule	Word	R/W
7BE5H~7BE7H	31717~31719	The 16th holiday and schedule	Word	R/W
7BE8H~7BEAH	31720~31722	The 17th holiday and schedule	Word	R/W
7BEBH~7BEDH	31723~31725	The 18th holiday and schedule	Word	R/W
7BEEH~7BF0H	31726~31728	The 19th holiday and schedule	Word	R/W
7BF1H~7BF3H	31729~31731	The 20th holiday and schedule	Word	R/W

Distributed by MicroDAQ, LLC
(603) 746-5524
www.microdaq.com

The 3rd Year Holiday Address Function: 03H Read 10H Preset				
Address(H)	**Address(D)**	**Parameters**	**Data Type**	**Type of Access**
7BF4H~7BF6H	31732~31734	The 21st holiday and schedule	Word	R/W
7BF7H~7BF9H	31735~31737	The 22nd holiday and schedule	Word	R/W
7BFAH~7BFCH	31738~31740	The 23rd holiday and schedule	Word	R/W
7BFDH~7BFFH	31741~31743	The 24th holiday and schedule	Word	R/W
7C00H~7C02H	31744~31746	The 25th holiday and schedule	Word	R/W
7C03H~7C05H	31747~31749	The 26th holiday and schedule	Word	R/W
7C06H~7C08H	31750~31752	The 27th holiday and schedule	Word	R/W
7C09H~7C0BH	31753~31755	The 28th holiday and schedule	Word	R/W
7C0CH~7C0EH	31756~31758	The 29th holiday and schedule	Word	R/W
7C0FH~7C11H	31759~31761	The 30th holiday and schedule	Word	R/W
7C12H	31762	The 3rd setting year	Word	R/W
7C13H	31763	Holiday number of the 3rd year	Word	R/W

Table 6-70 10 Years Holiday Settings (Year 4)

The 4th Year Holiday Address Function: 03H Read 10H Preset				
Address(H)	**Address(D)**	**Parameters**	**Data Type**	**Type of Access**
7C14H~7C16H	31764~31766	The 1st holiday and schedule (format: month/day/schedule)	Word	R/W
7C17H~7C19H	31767~31769	The 2nd holiday and schedule	Word	R/W
7C1AH~7C1CH	31770~31772	The 3rd holiday and schedule	Word	R/W
7C1DH~7C1FH	31773~31775	The 4th holiday and schedule	Word	R/W
7C20H~7C22H	31776~31778	The 5th holiday and schedule	Word	R/W
7C23H~7C25H	31779~31871	The 6th holiday and schedule	Word	R/W
7C26H~7C28H	31782~31874	The 7th holiday and schedule	Word	R/W
7C29H~7C2BH	31785~31787	The 8th holiday and schedule	Word	R/W
7C2CH~7C22H	31788~31790	The 9th holiday and schedule	Word	R/W
7C2FH~7C31H	31791~31793	The 10th holiday and schedule	Word	R/W
7C32H~7C34H	31794~31796	The 11th holiday and schedule	Word	R/W
7C35H~7C37H	31797~31799	The 12th holiday and schedule	Word	R/W
7C38H~7C3AH	31800~31802	The 13th holiday and schedule	Word	R/W
7C3BH~7C3DH	31803~31805	The 14th holiday and schedule	Word	R/W
7C3EH~7C40H	31806~31808	The 15th holiday and schedule	Word	R/W
7C41H~7C43H	31809~31811	The 16th holiday and schedule	Word	R/W
7C44H~7C46H	31812~31814	The 17th holiday and schedule	Word	R/W
7C47H~7C49H	31815~31817	The 18th holiday and schedule	Word	R/W
7C4AH~7C4CH	31818~31820	The 19th holiday and schedule	Word	R/W
7C4DH~7C4FH	31821~31823	The 20th holiday and schedule	Word	R/W
7C50H~7C52H	31824~31826	The 21st holiday and schedule	Word	R/W
7C53H~7C55H	31827~31829	The 22nd holiday and schedule	Word	R/W
7C56H~7C58H	31830~31832	The 23rd holiday and schedule	Word	R/W
7C59H~7C5BH	31833~31835	The 24th holiday and schedule	Word	R/W
7C5CH~7C5EH	31836~31838	The 25th holiday and schedule	Word	R/W
7C5FH~7C61H	31839~31841	The 26th holiday and schedule	Word	R/W
7C62H~7C64H	31842~31844	The 27th holiday and schedule	Word	R/W

The 4th Year Holiday Address Function: 03H Read 10H Preset				
Address(H)	**Address(D)**	**Parameters**	**Data Type**	**Type of Access**
7C65H~7C67H	31845~31847	The 28th holiday and schedule	Word	R/W
7C68H~7C6AH	31848~31850	The 29th holiday and schedule	Word	R/W
7C68H~7C6AH	31851~31853	The 30th holiday and schedule	Word	R/W
7C6EH	31854	The 4th setting year	Word	R/W
7C6FH	31855	Holiday number of the 4th year	Word	R/W

Table 6-71 10 Years Holiday Settings (Year 5)

The 5th Year Holiday Address Function: 03H Read 10H Preset				
Address(H)	**Address(D)**	**Parameters**	**Data Type**	**Type of Access**
7C70H~7C72H	31856~31858	The 1st holiday and schedule (format: month/day/schedule)	Word	R/W
7C73H~7C75H	31859~31861	The 2nd holiday and schedule	Word	R/W
7C76H~7C78H	31862~31864	The 3rd holiday and schedule	Word	R/W
7C79H~7C7BH	31865~31867	The 4th holiday and schedule	Word	R/W
7C7CH~7C7EH	31868~31870	The 5th holiday and schedule	Word	R/W
7C7FH~7C81H	31871~31873	The 6th holiday and schedule	Word	R/W
7C82H~7C84H	31874~31876	The 7th holiday and schedule	Word	R/W
7C85H~7C87H	31877~31879	The 8th holiday and schedule	Word	R/W
7C88H~7C8AH	31880~31882	The 9th holiday and schedule	Word	R/W
7C8BH~7C8DH	31883~31885	The 10th holiday and schedule	Word	R/W
7C8EH~7C90H	31886~31888	The 11th holiday and schedule	Word	R/W
7C91H~7C93H	31889~31891	The 12th holiday and schedule	Word	R/W
7C94H~7C96H	31892~31894	The 13th holiday and schedule	Word	R/W
7C97H~7C99H	31895~31897	The 14th holiday and schedule	Word	R/W
7C3EH~7C40H	31898~31900	The 15th holiday and schedule	Word	R/W
7C9DH~7C9FH	31901~31903	The 16th holiday and schedule	Word	R/W
7CA0H~7CA2H	31904~31906	The 17th holiday and schedule	Word	R/W
7CA3H~7CA5H	31907~31909	The 18th holiday and schedule	Word	R/W
7CA6H~7CA8H	31910~31912	The 19th holiday and schedule	Word	R/W
7CA9H~7CABH	31913~31915	The 20th holiday and schedule	Word	R/W
7CACH~7CAEH	31916~31918	The 21st holiday and schedule	Word	R/W
7CAFH~7CB1H	31919~31921	The 22nd holiday and schedule	Word	R/W
7CB2H~7CB4H	31922~31924	The 23rd holiday and schedule	Word	R/W
7CB5H~7CB7H	31925~31927	The 24th holiday and schedule	Word	R/W
7CB8H~7CBAH	31928~31930	The 25th holiday and schedule	Word	R/W
7CBBH~7CBDH	31931~31933	The 26th holiday and schedule	Word	R/W
7CBEH~7CC0H	31934~31936	The 27th holiday and schedule	Word	R/W
7CC1H~7CC3H	31937~31939	The 28th holiday and schedule	Word	R/W
7CC4H~7CC6H	31940~31942	The 29th holiday and schedule	Word	R/W
7CC7H~7CC9H	31943~31945	The 30th holiday and schedule	Word	R/W
7CCAH	31946	The 5th setting year	Word	R/W
7CCBH	31947	Holiday number of the 5th year	Word	R/W

Distributed by MicroDAQ, LLC
(603) 746-5524
www.microdaq.com

Table 6-72 10 Years Holiday Settings (Year 6)

The 6th Year Holiday Address Function: 03H Read 10H Preset				
Address(H)	Address(D)	Parameters	Data Type	Type of Access
7CCCH~7CCEH	31948~31950	The 1st holiday and schedule (format: month/day/schedule)	Word	R/W
7CCFH~7CD1H	31951~31953	The 2nd holiday and schedule	Word	R/W
7CD2H~7CD4H	31954~31956	The 3rd holiday and schedule	Word	R/W
7CD5H~7CD7H	31957~31959	The 4th holiday and schedule	Word	R/W
7CD8H~7CDAH	31960~31962	The 5th holiday and schedule	Word	R/W
7CDBH~7CDDH	31963~31965	The 6th holiday and schedule	Word	R/W
7CDEH~7CE0H	31966~31968	The 7th holiday and schedule	Word	R/W
7CE1H~7CE3H	31969~31971	The 8th holiday and schedule	Word	R/W
7CD4H~7CE6H	31972~31974	The 9th holiday and schedule	Word	R/W
7CE7H~7CE9H	31975~31977	The 10th holiday and schedule	Word	R/W
7CEAH~7CECH	31978~31980	The 11th holiday and schedule	Word	R/W
7CEDH~7CEFH	31981~31983	The 12th holiday and schedule	Word	R/W
7CF0H~7CF2H	31984~31986	The 13th holiday and schedule	Word	R/W
7CF3H~7CF5H	31987~31989	The 14th holiday and schedule	Word	R/W
7CF6H~7CF8H	31990~31992	The 15th holiday and schedule	Word	R/W
7CF9H~7CFBH	31993~31995	The 16th holiday and schedule	Word	R/W
7CFCH~7CFEH	31996~31998	The 17th holiday and schedule	Word	R/W
7CFFH~7D01H	31999~32001	The 18th holiday and schedule	Word	R/W
7D02H~7D04H	32002~32004	The 19th holiday and schedule	Word	R/W
7D05H~7D07H	32005~32007	The 20th holiday and schedule	Word	R/W
7D08H~7D0AH	32008~32010	The 21st holiday and schedule	Word	R/W
7DOBH~7D0DH	32011~32013	The 22nd holiday and schedule	Word	R/W
7D0EH~7D10H	32014~32016	The 23rd holiday and schedule	Word	R/W
7D11H~7D13H	32017~32019	The 24th holiday and schedule	Word	R/W
7D14H~7D16H	32020~32022	The 25th holiday and schedule	Word	R/W
7D17H~7D19H	32023~32025	The 26th holiday and schedule	Word	R/W
7D1AH~7D1CH	32026~32028	The 27th holiday and schedule	Word	R/W
7D1DH~7D1FH	32029~32031	The 28th holiday and schedule	Word	R/W
7D20H~7D22H	32032~32034	The 29th holiday and schedule	Word	R/W
7D23H~7D25H	32035~32037	The 30th holiday and schedule	Word	R/W
7D26H	32038	The 6th setting year	Word	R/W
7D27H	32039	Holiday number of the 6th year	Word	R/W

Table 6-73 10 Years Holiday Settings (Year 7)

The 7th Year Holiday Address Function: 03H Read 10H Preset				
Address(H)	Address(D)	Parameters	Data Type	Type of Access
7D28H~7D2AH	32040~32042	The 1st holiday and schedule (format: month/day/schedule)	Word	R/W
7D2BH~7D2DH	32043~32045	The 2nd holiday and schedule	Word	R/W
7D2EH~7D30H	32046~32048	The 3rd holiday and schedule	Word	R/W
7D31H~7D33H	32049~32051	The 4th holiday and schedule	Word	R/W
77D4H~7D36H	32052~32054	The 5th holiday and schedule	Word	R/W

The 7th Year Holiday Address Function: 03H Read 10H Preset				
Address(H)	**Address(D)**	**Parameters**	**Data Type**	**Type of Access**
7D37H~7D39H	32055~32057	The 6th holiday and schedule	Word	R/W
7D3AH~7D3CH	32058~32060	The 7th holiday and schedule	Word	R/W
7D3DH~7D3FH	32061~32063	The 8th holiday and schedule	Word	R/W
7D40H~7D42H	32064~32066	The 9th holiday and schedule	Word	R/W
7D43H~7D45H	32067~32069	The 10th holiday and schedule	Word	R/W
7D46H~D48H	32070~32072	The 11th holiday and schedule	Word	R/W
7D49H~D4BH	32073~32075	The 12th holiday and schedule	Word	R/W
7D4CH~D4EH	32076~32078	The 13th holiday and schedule	Word	R/W
7D4FH~D51H	32079~32081	The 14th holiday and schedule	Word	R/W
7D52H~7D54H	32082~32084	The 15th holiday and schedule	Word	R/W
7D55H~7D57H	32085~32087	The 16th holiday and schedule	Word	R/W
7D58H~7D5AH	32088~32090	The 17th holiday and schedule	Word	R/W
7D5BH~7D5DH	32091~32093	The 18th holiday and schedule	Word	R/W
7DFEH~7D60H	32094~32096	The 19th holiday and schedule	Word	R/W
7D61H~7D63H	32097~32099	The 20th holiday and schedule	Word	R/W
7D64H~7D66H	32100~32102	The 21st holiday and schedule	Word	R/W
7D67H~7D69H	32103~32105	The 22nd holiday and schedule	Word	R/W
7D6AH~7D6CH	32106~32108	The 23rd holiday and schedule	Word	R/W
7D6DH~7D6FH	32109~32111	The 24th holiday and schedule	Word	R/W
7D70H~7D72H	32112~32117	The 25th holiday and schedule	Word	R/W
7D73H~7D75H	32115~32117	The 26th holiday and schedule	Word	R/W
7D76H~7D78H	32118~32120	The 27th holiday and schedule	Word	R/W
7D79H~7D7BH	32121~32123	The 28th holiday and schedule	Word	R/W
7D7CH~7D7EH	32124~32126	The 29th holiday and schedule	Word	R/W
7D7FH~7D81H	32127~32129	The 30th holiday and schedule	Word	R/W
7D82H	32130	The 7th setting year	Word	R/W
7D83H	32131	Holiday number of the 7th year	Word	R/W

Table 6-74 10 Years Holiday Settings (Year 8)

The 8th Year Holiday Address Function: 03H Read 10H Preset				
Address(H)	**Address(D)**	**Parameters**	**Data Type**	**Type of Access**
7D84H~7D86H	32132~32134	The 1st holiday and schedule (format: month/day/schedule)	Word	R/W
7D87H~7D89H	32135~32137	The 2nd holiday and schedule	Word	R/W
7D8AH~7D8CH	32138~32140	The 3rd holiday and schedule	Word	R/W
7D8DH~7D8FH	32141~32143	The 4th holiday and schedule	Word	R/W
7D90H~7D92H	32144~32146	The 5th holiday and schedule	Word	R/W
7D93H~7D95H	32147~32149	The 6th holiday and schedule	Word	R/W
7D96H~7D98H	32150~32152	The 7th holiday and schedule	Word	R/W
7D99H~7D9BH	32153~32155	The 8th holiday and schedule	Word	R/W
7D9CH~7D9EH	32156~32158	The 9th holiday and schedule	Word	R/W
7D9FH~7DA1H	32159~32161	The 10th holiday and schedule	Word	R/W
7DA2H~7DA4H	32162~32164	The 11th holiday and schedule	Word	R/W
7DA5H~7DA7H	32165~32167	The 12th holiday and schedule	Word	R/W

Distributed by MicroDAQ, LLC
(603) 746-5524
www.microdaq.com

The 8th Year Holiday Address Function: 03H Read 10H Preset				
Address(H)	**Address(D)**	**Parameters**	**Data Type**	**Type of Access**
7DA8H~7DAAH	32168~32170	The 13th holiday and schedule	Word	R/W
7DABH~7DADH	32171~32173	The 14th holiday and schedule	Word	R/W
7DAEH~7DB0H	32174~32176	The 15th holiday and schedule	Word	R/W
7DB1H~7DB3H	32177~32179	The 16th holiday and schedule	Word	R/W
7DB4H~7DB6H	32180~32182	The 17th holiday and schedule	Word	R/W
7DB7H~7DB9H	32183~32185	The 18th holiday and schedule	Word	R/W
7DBAH~7DBCH	32186~32188	The 19th holiday and schedule	Word	R/W
7DBDH~7DBFH	32189~32191	The 20th holiday and schedule	Word	R/W
7DC0H~7DC2H	32192~32194	The 21st holiday and schedule	Word	R/W
7DC3H~7DC5H	32195~32197	The 22nd holiday and schedule	Word	R/W
7DC6H~7DC8H	32198~32200	The 23rd holiday and schedule	Word	R/W
7DC9H~7DCBH	32201~32203	The 24th holiday and schedule	Word	R/W
7DCCH~7DCEH	32204~32206	The 25th holiday and schedule	Word	R/W
7DCFH~7DD1H	32207~32209	The 26th holiday and schedule	Word	R/W
7DD2H~7DD4H	32210~32212	The 27th holiday and schedule	Word	R/W
7DD5H~7DD7H	32213~32215	The 28th holiday and schedule	Word	R/W
7DD8H~7DDAH	32216~32218	The 29th holiday and schedule	Word	R/W
7DDBH~7DDDH	32219~32221	The 30th holiday and schedule	Word	R/W
7DDEH	32222	The 8th setting year	Word	R/W
7DDFH	32223	Holiday number of the 8th year	Word	R/W

Table 6-75 10 Years Holiday Settings (Year 9)

The 9th Year Holiday Address Function: 03H Read 10H Preset				
Address(H)	**Address(D)**	**Parameters**	**Data Type**	**Type of Access**
7DE0H~7DE2H	32224~32226	The 1st holiday and schedule (format: month/day/schedule)	Word	R/W
7DE3H~7DE5H	32227~32229	The 2nd holiday and schedule	Word	R/W
7DE6H~7DE8H	32230~32232	The 3rd holiday and schedule	Word	R/W
7DE9H~7DEBH	32233~32235	The 4th holiday and schedule	Word	R/W
7DECH~7DEEH	32236~32238	The 5th holiday and schedule	Word	R/W
7DEFH~7DF1H	32239~32241	The 6th holiday and schedule	Word	R/W
7DF2H~7DF4H	32242~32244	The 7th holiday and schedule	Word	R/W
7DF5H~7DF7H	32245~32247	The 8th holiday and schedule	Word	R/W
7DF8H~7DFAH	32248~32250	The 9th holiday and schedule	Word	R/W
7DFBH~7DFDH	32251~32253	The 10th holiday and schedule	Word	R/W
7DFEH~7E00H	32254~32256	The 11th holiday and schedule	Word	R/W
7E01H~7E03H	32257~32259	The 12th holiday and schedule	Word	R/W
7E04H~7E06H	32260~32262	The 13th holiday and schedule	Word	R/W
7E07H~7E09H	32263~32265	The 14th holiday and schedule	Word	R/W
7E0AH~7E0CH	32266~32268	The 15th holiday and schedule	Word	R/W
7E0DH~7E0FH	32269~32271	The 16th holiday and schedule	Word	R/W
7E10H~7E12H	32272~32274	The 17th holiday and schedule	Word	R/W
7E13H~7E15H	32275~32277	The 18th holiday and schedule	Word	R/W
7E16H~7E18H	32278~32280	The 19th holiday and schedule	Word	R/W

The 9th Year Holiday Address Function: 03H Read 10H Preset				
Address(H)	**Address(D)**	**Parameters**	**Data Type**	**Type of Access**
7E19H~7E1BH	32281~32283	The 20th holiday and schedule	Word	R/W
7E1CH~7E1EH	32284~32286	The 21st holiday and schedule	Word	R/W
7E1FH~7E21H	32287~32289	The 22nd holiday and schedule	Word	R/W
7E22H~7E24H	32290~32292	The 23rd holiday and schedule	Word	R/W
7E25H~7E27H	32293~32295	The 24th holiday and schedule	Word	R/W
7E28H~7E2AH	32296~32298	The 25th holiday and schedule	Word	R/W
7E2BH~7E2DH	32299~32301	The 26th holiday and schedule	Word	R/W
7E2EH~7E30H	32302~32304	The 27th holiday and schedule	Word	R/W
7E31H~7E33H	32305~32307	The 28th holiday and schedule	Word	R/W
7E34H~7E36H	32308~32310	The 29th holiday and schedule	Word	R/W
7E37H~7E39H	32311~32313	The 30th holiday and schedule	Word	R/W
7E3AH	32314	The 9th setting year	Word	R/W
7E3BH	32315	Holiday number of the 9th year	Word	R/W

Table 6-76 10 Years Holiday Settings (Year 10)

The 10th Year Holiday Address Function: 03H Read 10H Preset				
Address(H)	**Address(D)**	**Parameters**	**Data Type**	**Type of Access**
7E3CH~7E3EH	32316~32318	The 1st holiday and schedule (format: month/day/schedule)	Word	R/W
7E3FH~7E41H	32319~32321	The 2nd holiday and schedule	Word	R/W
7E42H~7E44H	32322~32324	The 3rd holiday and schedule	Word	R/W
7E45H~7E47H	32325~32327	The 4th holiday and schedule	Word	R/W
7E48H~7E4AH	32328~32330	The 5th holiday and schedule	Word	R/W
7E4BH~7E4DH	32331~32333	The 6th holiday and schedule	Word	R/W
7E4EH~7E50H	32334~32336	The 7th holiday and schedule	Word	R/W
7E51H~7E53H	32337~32339	The 8th holiday and schedule	Word	R/W
7E54H~7E56H	32340~32342	The 9th holiday and schedule	Word	R/W
7E57H~7E59H	32343~32345	The 10th holiday and schedule	Word	R/W
7E5AH~7E5CH	32346~32348	The 11th holiday and schedule	Word	R/W
7E5DH~7E5FH	32349~32351	The 12th holiday and schedule	Word	R/W
7E60H~7E62H	32352~32354	The 13th holiday and schedule	Word	R/W
7E63H~7E65H	32355~32357	The 14th holiday and schedule	Word	R/W
7E66H~7E68H	32358~32360	The 15th holiday and schedule	Word	R/W
7E69H~7E6BH	32361~32363	The 16th holiday and schedule	Word	R/W
7E6CH~7E6EH	32364~32366	The 17th holiday and schedule	Word	R/W
7E6FH~7E71H	32367~32369	The 18th holiday and schedule	Word	R/W
7E72H~7E74H	32370~32372	The 19th holiday and schedule	Word	R/W
7E75H~7E77H	32373~32375	The 20th holiday and schedule	Word	R/W
7E78H~7E7AH	32376~32378	The 21st holiday and schedule	Word	R/W
7E7BH~7E7DH	32379~32381	The 22nd holiday and schedule	Word	R/W
7E7EH~7E80H	32382~32384	The 23rd holiday and schedule	Word	R/W
7E81H~7E83H	32385~32387	The 24th holiday and schedule	Word	R/W
7E84H~7E86H	32388~32390	The 25th holiday and schedule	Word	R/W

Distributed by MicroDAQ, LLC
(603) 746-5524
www.microdaq.com

The 10th Year Holiday Address Function: 03H Read 10H Preset				
Address(H)	**Address(D)**	**Parameters**	**Data Type**	**Type of Access**
7E87H~7E89H	32391~32393	The 26th holiday and schedule	Word	R/W
7E8AH~7E8CH	32394~32396	The 27th holiday and schedule	Word	R/W
7E8DH~7E8FH	32397~32399	The 28th holiday and schedule	Word	R/W
7E90H~7E92H	32400~32402	The 29th holiday and schedule	Word	R/W
7E93H~7E95H	32403~32405	The 30th holiday and schedule	Word	R/W
7E96H	32406	The 10th setting year	Word	R/W
7E97H	32407	Holiday number of the 10th year	Word	R/W

6.3.20 Wave Form

Waveform Record Parameter Setup

Function code: 03H Read 10H Pre-set.

Table 6-77 Waveform Record Parameter Setting

Address(H)	Address(H)	Parameters	Data Type	Proper-ty	Range	Default	Factory Setting
8000H	32768	Manual Trigger	Word	R/W	0xAA: Enable 0: Disable	0	0
8001H	32769	DI Trigger – AXM-IO11	Word	R/W	bit1bit0: DI1 bit3bit2: DI2 bit5bit4: DI3 bit7bit6: DI4 bit9bit8: DI5 bit11bit10: DI6 00: Disable 01: From OFF to ON 10: From ON to OFF 11: Any DI state change	0	0
8002H	32770	DI Trigger – AXM-IO21	Word	R/W	bit1bit0: DI7 bit3bit2: DI8 bit5bit4: DI9 bit7bit6: DI10 00: Disable 01: From OFF to ON 10: From ON to OFF 11: Any DI state change	0	0

Address(H)	Address(H)	Parameters	Data Type	Proper-ty	Range	Default	Factory Setting
8003H	32771	DI Trigger – AXM-IO31	Word	R/W	Bit1bit0: DI11 bit3bit2: DI12 bit5bit4: DI13 bit7bit6: DI14 00: Disable 01: From OFF to ON 10: From ON to OFF 11: Any DI state change	0	0
8004H	32772	Voltage rated value	Word	R/W	Depends on the Wiring Mode LN: 50V-400V LL: 50V-690V	400	400
8005H	32773	Voltage sag trigger	Word	R/W	1: Enable 0: Disable	0	0
8006H	32774	Voltage sag threshold	Word	R/W	20-100%	50	50
8007H	32775	Voltage sag half cycle threshold	Word	R/W	4-200 half cycles	10	10
8008H	32776	Voltage swell trigger	Word	R/W	1: Enable, 0: Disable	0	0
8009H	32777	Voltage swell threshold	Word	R/W	50-140%	100	100
800AH	32778	Sample Rate	Word	R/W	0: 64 points 1: 128 points	0	0
800BH	32779	Current rated value	Word	R/W	5A Meter Type 0.5~5.0 Other Meter Type 0.5~1.2	1000 (1.000A)	1000 (1.000A)
800CH	32780	Over-current triggering waveform	Word	R/W	1: Enable 0: Disable	0	0
800DH	32781	Over-current threshold	Word	R/W	50-150%	100	100
800EH	32782	Clear waveform	Word	R/W	0x55: Enable	0	0
800FH	32783	Clear power quality event	Word	R/W	0x55: Enable	0	0

NOTE: In 3LL and 2LL systems, the voltage rated value refers to the line voltage; in 3LN, 1LN and 1LL systems, the voltage rated value refers to the phase voltage.

Waveform Capture Data Retrieve Address

Waveform Capture data includes timestamp, triggering condition, and waveform data. Each waveform group uses the same data format, and only one waveform group saved in the registers. When retrieving the waveform data, firstly input the desired group number into the register 0x8F00 and input the desired data number into the register 0x8F01, then read the registers to acquire waveform corresponding to the desired group number. The ranges of the group number and data number as well as the Modbus addresses for waveform data readings can be found in Table 6-78 below.

The relationship between voltage waveform value and real value:

Real Value (Unit: V) = Waveform Value / 37.59105

The relationship between current waveform values and real values varies based on the specific meter type:

Distributed by MicroDAQ, LLC
(603) 746-5524
www.microdaq.com

1. 5A, 1A: Real Value (Unit: A) = Waveform Value / 1683.153.
2. 333mV: Real Value (Unit: A) = Waveform Value / K (firmware above 3.21, K=14427.15; other cases: K = 15869.87).
3. 100mV (Rope-CT): Real Value (Unit: A) = Waveform Value / K (firmware above 3.21, K=20291.1; firmware 3.20, K=22068.8; other cases: K = 15869.87)
4. mA CT: Real Value (Unit: A) = Waveform Value / K (80mA CT: K=7414.289; 100mA: K=9267.440; 200mA: K=18514.68).

The voltage and current value obtained from the waveform are the PT or CT secondary side value.

Read: 03H, Preset: 10H. For more information, please refer to Chapter 4.7.

Table 6-78 Event Record Reading

Address (H)	Address (D)	Parameter	Default	Range	Data Type	Property
8F00H		Waveform group number for retrieving		128-point recording 1~100 64-point recording 1~200 When the value is smaller than or equal to latest waveform record group number, this value is valid	Word	R/W
8F01H	36609	Data number of each record		128-point recording 1~241 64-point recording 1~121	Word	R/W
8F02H	36610	Waveform record window status		0x0BH: Window data is valid 0xFF: Window data is invalid 0xAA: Waveform record memory is currently undergoing clearing (data is invalid)	Word	R/W
8F03H	36611	Latest waveform group number		128-point recording 1~100 64-point recording 1~200 0: No waveform records	Word	R/W
8F04H~8F43	36612~36675	Waveform record data retrieving window		-32768~32767	Word	R/W

Power Quality Event Retrieve Address

Power quality event data includes timestamp, triggering condition, and related settings. Each group uses the same data format, and only ten groups of data are saved in the registers. When retrieving the event data, its parameter settings must be correctly configured in order to obtain correct information.

Read: 03H, Preset: 10H. For more information, please refer to Chapter 4.7.

Table 6-79 Power Quality Event Record Reading

Address(H)	Address(D)	Parameters	Data Type	Property	Range	Default	Factory Setting
8CFDH	36093	Latest event record group number	Word	R	1~50000 0: No data	0	0
8CFEH	36094	Initial retrieval event record group number	Word	R/W	1~50000 When the value is smaller than or equal to latest event record group number, this value is valid	1	1
No. 1 Event							
8D00H	36096	Timestamp High byte – Year Low byte – Month	Word	R	Time		
8D01H	36097	Timestamp High byte – Day Low byte – Hour	Word	R	Time		
8D02H	36098	Timestamp High byte – Minute Low byte – Second	Word	R	Time		
8D03H	36099	Timestamp: Millisecond	Word	R	Time		
8D04H	36100	Voltage sag or voltage swell condition	Word	R	0: Disabled 1: Voltage sag 2: Voltage swell		
8D05H	36101	Rated voltage value	Word	R	50V~400V (or 50V~690V only in 3LL)		
8D06H	36102	Set Threshold	Word	R	Voltage sag: 20-100% Voltage swell: 50-140%		
8D07H	36103	Half cycle count	Word	R	Voltage sag event: 4~200 Voltage swell event: 0		
8D08H~8D0FH	36104~36111	No. 2 Event	Word	R			
8D10H~8D17H	36112~36119	No. 3 Event	Word	R			
8D18H~8D1FH	36120~36127	No. 4 Event	Word	R			
8D20H~8D27H	36128~36135	No. 5 Event	Word	R			
8D28H~8D2FH	36136~36143	No. 6 Event	Word	R			
8D30H~8D37H	36144~36151	No. 7 Event	Word	R			
8D38H~8D3FH	36152~36159	No. 8 Event	Word	R			
8D40H~8D47H	36160~36167	No. 9 Event	Word	R			
8D48H~8D4FH	36168~36175	No. 10 Event	Word	R			

Distributed by MicroDAQ, LLC
(603) 746-5524
www.microdaq.com

6.3.21 Phase Selection

Table 6-80 Phase Selection Parameters

Phase Selection Settings: 03H Read, 10H Write					
Address(H)	**Address(D)**	**Parameters**	**Range**	**Data Type**	**Property**
10F4H	4340	Ia channel phase selection	0: None 1: Physical Wiring Ia 2: Physical Wiring Ib 3: Physical Wiring Ic 4: Physical Wiring In	int16	R/W
10F5H	4341	Ib channel phase selection	0: None 1: Physical Wiring Ia 2: Physical Wiring Ib 3: Physical Wiring Ic 4: Physical Wiring In	int16	R/W
10F6H	4342	Ic channel phase selection	0: None 1: Physical Wiring Ia 2: Physical Wiring Ib 3: Physical Wiring Ic 4: Physical Wiring In	int16	R/W
10F7H	4343	In channel phase selection	0: None 1: Physical Wiring Ia 2: Physical Wiring Ib 3: Physical Wiring Ic 4: Physical Wiring In	int16	R/W

6.3.22 Independent Channel

Table 6-81 Independent Input Channel Settings

Independent Input Channel Settings: 03H Read, 10H Write					
Address(H)	**Address(D)**	**Parameters**	**Range**	**Data Type**	**Property**
142FH	5167	Enable Independent Input Channel	0: Disable 1: Enable	Word	R/W
1430H	5168	Input Channel 1 CT1	1~50000	Word	R/W
1431H	5169	Input Channel 2 CT1	1~50000	Word	R/W
1432H	5170	Input Channel 3 CT1	1~50000	Word	R/W
1022H	4130	Input Channel 4 CT1 (Same address as CT41)	1~50000	Word	R/W

Independent Input Channel Settings: 03H Read, 10H Write					
Address(H)	**Address(D)**	**Parameters**	**Range**	**Data Type**	**Property**
1433H	5171	Voltage Selection for Input Channel 1	0: Disable 1: Va 2: Vb 3: Vc 4: Vab 5: Vbc 6: Vca	Word	R/W
1434H	5172	Voltage Selection for Input Channel 2	0: Disable 1: Va 2: Vb 3: Vc 4: Vab 5: Vbc 6: Vca	Word	R/W
1435H	5173	Voltage Selection for Input Channel 3	0: Disable 1: Va 2: Vb 3: Vc 4: Vab 5: Vbc 6: Vca	Word	R/W
1436H	5174	Voltage Selection for Input Channel 4	0: Disable 1: Va 2: Vb 3: Vc 4: Vab 5: Vbc 6: Vca	Word	R/W
1437H	5175	Summation Channel 1 Configuration	Bit0: Input Channel 1 Bit1: Input Channel 2 Bit2: Input Channel 3 Bit3: Input Channel 4 0: Not Selected 1: Selected	Word	R/W

Distributed by MicroDAQ, LLC
(603) 746-5524
www.microdaq.com

Independent Input Channel Settings: 03H Read, 10H Write					
Address(H)	**Address(D)**	**Parameters**	**Range**	**Data Type**	**Property**
1438H	5176	Summation Channel 2 Configuration	Bit0: Input Channel 1 Bit1: Input Channel 2 Bit2: Input Channel 3 Bit3: Input Channel 4 0: Not Selected 1: Selected	Word	R/W

6.4 BACnet Protocol

6.4.1 BACnet Overview and Introduction

Developed for Building Automation and Control Networks, BACnet is a standard communication protocol (ANSI/ASHRAE Standard 135-1995). The BACnet protocol can be found throughout commercial and industrial buildings because it supports communication and control of systems within a facility such as HVAC, lighting, and fire detection. The protocol was developed as a means to allow devices from different manufacturers to interoperate.

The BACnet protocol consists of Objects that contain different kinds of information and defines five groups (or classes) of 35 message types. Each Object has properties that contain data related to it. For example, one class contains messages for retrieving and manipulating object properties such as the common service request "ReadProperty." When the server machine receives this message from a client machine, it locates the requested property of the requested object and sends the value to the client.

Below is the example of an Object for Total Watts:

Object_Name, P_rms

Object_Type, AnalogValue

Object_Instance, 17

Present_Value, watt, tot (value in watts)

For additional information on the BACnet protocol, visit www.bacnet.org.

6.4.2 BACnet Protocol on the Acuvim-L Power Meter Series

The Acuvim-L Series Power Meter supports the BACnet communication protocol using BACnet MS/TP (Serial) and BACnet IP (Ethernet). BACnet MS/TP communication is supported via RS485, and BACnet IP communication requires the installation of an AXM-WEB2 Module to the meter.

The Acuvim-L Series Power Meter's BACnet protocol supports 71 predefined BACnet objects that allow the users to track up to 71 measurements.

Table 6-82 BACnet MS/TP Characteristics

Network Type	Serial RS485 with a Master/Slave Token Passing protocol
Topology	Line topology
Installation	Any cable with at least three conductors can be used. Distance between nodes depends on baud rate.
Speed (Baud)	9600 kbits/s, 19200 kbits/s, 38400 kbits/s, 76800 kbits/s
Max Station	127 MS/TP masters
Data	Up to 480 bytes per telegram frame

Distributed by MicroDAQ, LLC
(603) 746-5524
www.microdaq.com

Table 6-83 BACnet IP Characteristics

Network Type	Ethernet based network using UDP for data transfer
Topology	Line or star topology (Standard Ethernet topology)
Installation	Ethernet twisted pair cables with RJ45 connectors
Speed (Baud)	10/100 Mbit/s full duplex
Max Station	No network limitation of number of nodes
Data	Up to 1476 bytes per frame

6.4.3 BACnet MS/TP Communication

The BACnet MS/TP module uses a standard RS485 connector to access the network.

Table 6-84 Communications Terminal: A, B, S

Terminal Name	Name	Description
A	Data+	Positive RS485 RxD/TxD
B	Data-	Negative RS485 RxD/TxD
S	Shield	Cable Shield

The Acuvim-L Series Meter supports two protocols: BACnet MS/TP and Modbus RTU. By default, the meter is configured to Modbus RTU communication.

During normal meter operation, caution should be used when handling the following as high voltage may be present:

- Terminal Blocks
- Current/Potential Transformer leads and the related circuits.
- All primary and secondary circuits may contain lethal current and voltage
- Contact with current channels must be avoided.

The meter can be connected to the BACnet network through RS485 interface. Users can configure BACnet settings by following steps below:

1. Press **H** and **V/A** keys simultaneously for about one second and release, the screen will go blank, and the cursor will be flashing. Press either **P** or **E** to move the flashing cursor over to **Setting** and press **V/A** to enter the meter settings. Enter the password for the meter and press **V/A** to enter the Parameter Setting page. Press either **P** or **E** to move the cursor over to **SYS,** and press **V/A** to enter the System Parameter Settings page.

Please refer to Chapter 3 for details on how to use the meter's display.

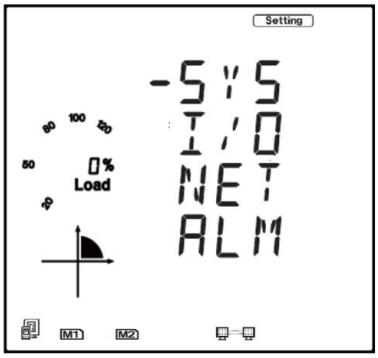

Figure 6-1 Parameter Setting Page

Distributed by MicroDAQ, LLC
(603) 746-5524
www.microdaq.com

2. Set the BACnet meter address in page **S01.** After setting the address, press **V/A** to accept.

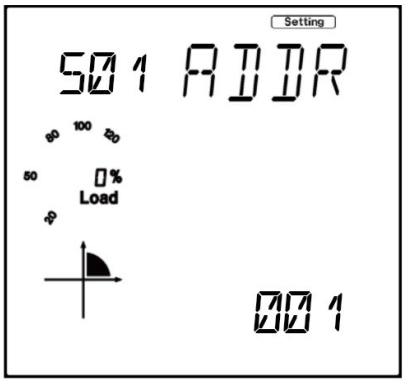

Figure 6-2 System Parameter Setting - S01 Address

3. Set Baud Rate in page **S02.** The default setting is 19200, and the meter can support the Baud Rate ranges from 2400 to 115200. After setting the BACnet MS/TP Baud Rate, press **V/A** to accept.

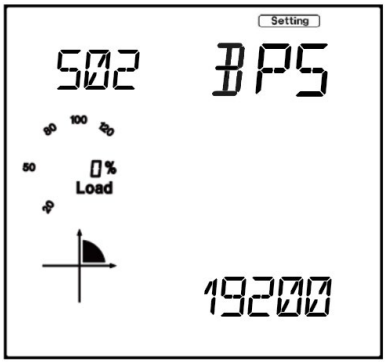

Figure 6-3 System Parameter Setting - S02 Baud Rate

4. Set Protocol 1 to **BACNET** in page **S38,** and press **V/A** to accept.

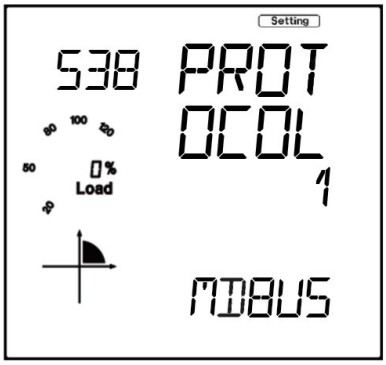

Figure 6-4 System Parameter Setting – S38 Protocol 1

5. Set MS/TP Max Info Frames in page **S51.** The BACnet MS/ TP Max Info Frames default value is 10, and the user defined range of Max Info Frames is 1 to 255. After setting the MS/TP Max Info Frames, press **V/A** to accept.

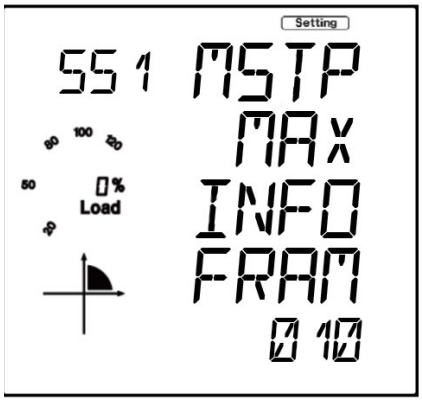

Figure 6-5 System Parameter Setting – S51 MS/TP Max Info Frames

6. Set MS/TP BACnet device ID in page **S52.** Set a unique device ID and press **V/A** to accept.

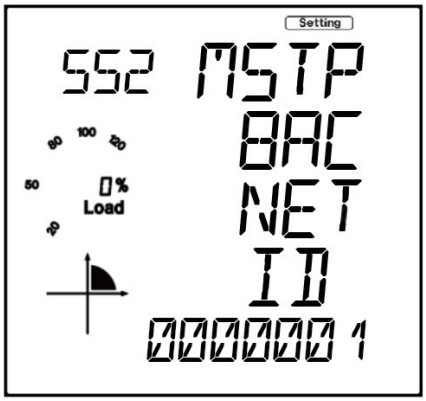

Figure 6-6 System Parameter Setting – S52 MS/TP BACnet ID

6.4.4 BACnet IP Communication

To configure the BACnet IP Communication settings, use the built-in web server included with the AXM-WEB2 module installed to the meter. Ensure the network settings related to the BACnet IP Communication are configured correctly so it can be accessed by a computer within the Local Area Network.

Users can follow the steps below to configure BACnet settings:

1. Open an Internet browser and enter the IP address of the meter.

2. Login with **Admin** Access.

3. Click on **Settings** located at the top of the window and select **Communications.**

Distributed by MicroDAQ, LLC
(603) 746-5524
www.microdaq.com

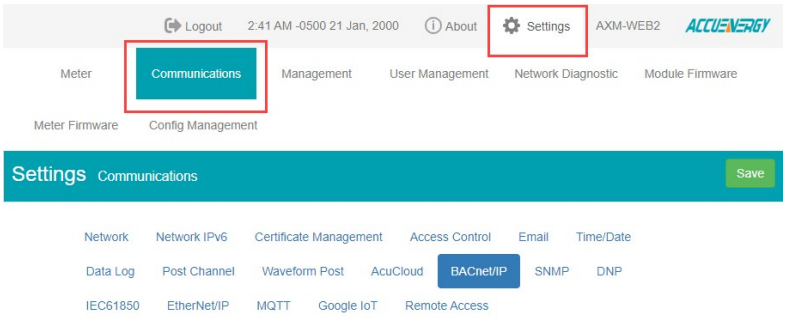

Figure 6-7 Communication Settings

4. Select **BACnet/IP** tab to configure the settings related to BACnet IP protocol.

5. Under **BACnet Enable,** select **Enable** to enable the BACnet protocol.

6. Enter the **BACnet Port** number, the default value is 47808.

7. Enter the **Device Instance** for the device. The instance number of the device must be unique within the BACnet system.

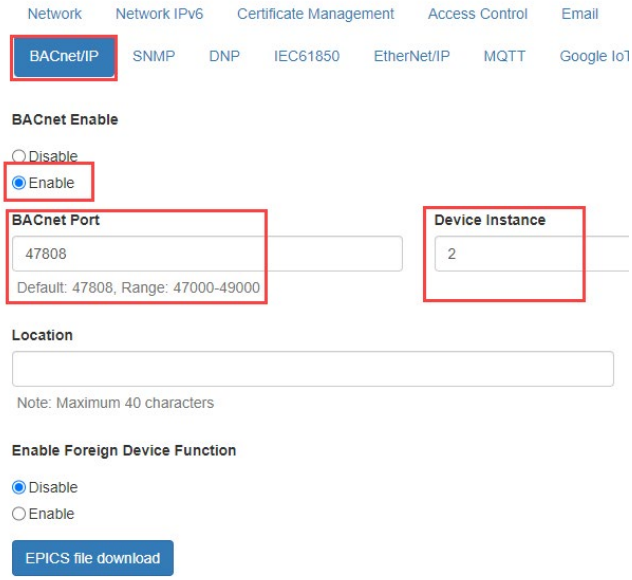

Figure 6-8 BACnet/IP Settings

Note: To communicate with a BACnet device from other subnet, users can **Enable Foreign Device Function** and enter **BBMD IP, BBMD Port,** and **Time to Live.**

After Configuring the settings, click on **Save** and reboot the device for the settings to take effect.

6.4.5 Acuvim-L Series Power Meter's BACnet Objects

The Acuvim-L Series Power Meter supports 71 pre-defined BACnet objects based on the meter's real-time measurement parameters. There is no programming or mapping necessary to use this list of BACnet objects. The object's name easily identifies the type of measurement.

The following objects have the object type as Analog Inputs. The table below lists each of the objects with the instance number and the unit of measurement.

Table 6-85 BACnet Objects

Instance	Object Type	Name	Object Data Type	Units
1	Object Analog Input	Frequency	Float	Hertz (Hz)
2	Object Analog Input	Phase A Voltage	Float	Volts (V)
3	Object Analog Input	Phase B Voltage	Float	Volts (V)
4	Object Analog Input	Phase C Voltage	Float	Volts (V)
5	Object Analog Input	Average Phase Voltage	Float	Volts (V)
6	Object Analog Input	Line Voltage AB	Float	Volts (V)
7	Object Analog Input	Line Voltage BC	Float	Volts (V)
8	Object Analog Input	Line Voltage CA	Float	Volts (V)
9	Object Analog Input	Average Line Voltage	Float	Volts (V)
10	Object Analog Input	Phase A Current	Float	Amperes (A)
11	Object Analog Input	Phase B Current	Float	Amperes (A)
12	Object Analog Input	Phase C Current	Float	Amperes (A)
13	Object Analog Input	Average Current	Float	Amperes (A)
14	Object Analog Input	Neutral Current	Float	Amperes (A)
15	Object Analog Input	Phase A Active Power	Float	Kilowatts (kW)
16	Object Analog Input	Phase B Active Power	Float	Kilowatts (kW)
17	Object Analog Input	Phase C Active Power	Float	Kilowatts (kW)
18	Object Analog Input	Total Active Power	Float	Kilowatts (kW)
19	Object Analog Input	Phase A Reactive Power	Float	Kilovolt Amperes Reactive (kVAR)
20	Object Analog Input	Phase B Reactive Power	Float	Kilovolt Amperes Reactive (kVAR)
21	Object Analog Input	Phase C Reactive Power	Float	Kilovolt Amperes Reactive (kVAR)
22	Object Analog Input	Total Reactive Power	Float	Kilovolt Amperes Reactive (kVAR)
23	Object Analog Input	Phase A Apparent Power	Float	Kilovolt Amperes (kVA)
24	Object Analog Input	Phase B Apparent Power	Float	Kilovolt Amperes (kVA)
25	Object Analog Input	Phase C Apparent Power	Float	Kilovolt Amperes (kVA)
26	Object Analog Input	Total Apparent Power	Float	Kilovolt Amperes (kVA)
27	Object Analog Input	Phase A Power Factor	Float	-
28	Object Analog Input	Phase B Power Factor	Float	-
29	Object Analog Input	Phase C Power Factor	Float	-
30	Object Analog Input	Total Power Factor	Float	-
31	Object Analog Input	Voltage Unbalance Factor	Float	Percent
32	Object Analog Input	Current Unbalance Factor	Float	Percent
33	Object Analog Input	Load Type	Float	-
34	Object Analog Input	Active Power Demand	Float	Kilowatts (kW)
35	Object Analog Input	Reactive Power Demand	Float	Kilovolt Amperes Reactive (kVAR)
36	Object Analog Input	Apparent Power Demand	Float	Kilovolt Amperes (kVA)
37	Object Analog Input	Phase A Current Demand	Float	Amperes (A)
38	Object Analog Input	Phase B Current Demand	Float	Amperes (A)
39	Object Analog Input	Phase C Current Demand	Float	Amperes (A)
40	Object Analog Input	Import Active Energy	Float	Kilowatt Hours (kWh)

Distributed by MicroDAQ, LLC
(603) 746-5524
www.microdaq.com

Instance	Object Type	Name	Object Data Type	Units
41	Object Analog Input	Export Active Energy	Float	Kilowatt Hours (kWh)
42	Object Analog Input	Import Reactive Energy	Float	Kilovolt Ampere Hours Reactive (kVARh)
43	Object Analog Input	Export Reactive Energy	Float	Kilovolt Ampere Hours Reactive (kVARh)
44	Object Analog Input	Energy Total	Float	Kilowatt Hours (kWh)
45	Object Analog Input	Energy Net	Float	Kilowatt Hours (kWh)
46	Object Analog Input	Reactive Energy Total	Float	Kilovolt Ampere Hours Reactive (kVARh)
47	Object Analog Input	Reactive Energy Net	Float	Kilovolt Ampere Hours Reactive (kVARh)
48	Object Analog Input	Apparent Energy	Float	Kilovolt Ampere Hours (kVAh)
49	Object Analog Input	Phase A Import Active Energy	Float	Kilowatt Hours (kWh)
50	Object Analog Input	Phase A Export Active Energy	Float	Kilowatt Hours (kWh)
51	Object Analog Input	Phase B Import Active Energy	Float	Kilowatt Hours (kWh)
52	Object Analog Input	Phase B Export Active Energy	Float	Kilowatt Hours (kWh)
53	Object Analog Input	Phase C Import Active Energy	Float	Kilowatt Hours (kWh)
54	Object Analog Input	Phase C Export Active Energy	Float	Kilowatt Hours (kWh)
55	Object Analog Input	Phase A Import Reactive Energy	Float	Kilovolt Ampere Hours Reactive (kVARh)
56	Object Analog Input	Phase A Export Reactive Energy	Float	Kilovolt Ampere Hours Reactive (kVARh)
57	Object Analog Input	Phase B Import Reactive Energy	Float	Kilovolt Ampere Hours Reactive (kVARh)
58	Object Analog Input	Phase B Export Reactive Energy	Float	Kilovolt Ampere Hours Reactive (kVARh)
59	Object Analog Input	Phase C Import Reactive Energy	Float	Kilovolt Ampere Hours Reactive (kVARh)
60	Object Analog Input	Phase C Export Reactive Energy	Float	Kilovolt Ampere Hours Reactive (kVARh)
61	Object Analog Input	Phase A Apparent Energy	Float	Kilovolt Ampere Hours (kVAh)
62	Object Analog Input	Phase B Apparent Energy	Float	Kilovolt Ampere Hours (kVAh)
63	Object Analog Input	Phase C Apparent Energy	Float	Kilovolt Ampere Hours (kVAh)
64	Object Analog Input	Phase A Voltage THD	Float	Percent
65	Object Analog Input	Phase B Voltage THD	Float	Percent
66	Object Analog Input	Phase C Voltage THD	Float	Percent
67	Object Analog Input	Average Voltage THD	Float	Percent
68	Object Analog Input	Phase A Current THD	Float	Percent
69	Object Analog Input	Phase B Current THD	Float	Percent
70	Object Analog Input	Phase C Current THD	Float	Percent
71	Object Analog Input	Average Current THD	Float	Percent

Distributed by MicroDAQ, LLC
(603) 746-5524
www.microdaq.com

Appendix

Appendix A Technical Data and Specification

Input Ratings	
CURRENT INPUTS *(EACH CHANNEL)*	
Nominal Current Options	① 5A, ② 1A, ③ 333mV, ④ Rogowski Coil
Metering Range	① 0-10A, ② 0-2A, ③ 0-400mV, ④ 0-400mV
Pickup Current	① 5mA, ② 1mA, ③ 0.25mV, ④ 0.25mV
Withstand	20Arms Continuous, 0.1% of Nominal 100Arms for 1 Second, Non-Recurring
Burden	0.05VA (Typical) @ 5A RMS
Accuracy	0.1% at Reading
VOLTAGE INPUTS *(EACH CHANNEL)*	
Nominal Full Scale	400Vac L-N, 690Vac L-L (+20%)
Withstand	1500Vac Continuous 2500Vac, 50/60Hz for 1 Minute
Input Impedance	2MΩ per Phase
Metering Frequency	45Hz~65Hz
Pickup Voltage	10Vac
Accuracy	0.1% at Reading
ENERGY ACCURACY	
Active	EL: Class 0.2s (According to IEC 62053-22) EL: Class 0.2 (According to ANSI C12.20) CL: Class 0.5s (According to IEC 62053-22) CL: Class 0.5 (According to ANSI C12.20)
Reactive	Class 2 (According to IEC 62053-23)
HARMONIC RESOLUTION	
Metered Value	63rd Harmonic

Metering			
PARAMETERS	**ACCURACY**	**RESOLUTION**	**RANGE**
Voltage	0.1%	0.1V	10V~1000kV
Current	0.1%	0.1mA	5mA~50000A
Power	EL: 0.2% CL: 0.5%	1W	-9999MW~9999MW
Reactive Power	EL: 0.2% CL: 0.5%	1var	-9999Mvar~9999Mvar
Apparent Power	EL: 0.2% CL: 0.5%	1VA	0~9999MVA
Power Demand	EL: 0.2% CL: 0.5%	1W	-9999MW~9999MW

Distributed by MicroDAQ, LLC
(603) 746-5524
www.microdaq.com

Reactive Power Demand		EL: 0.2% CL: 0.5%	1var	-9999Mvar~9999Mvar
Apparent Power Demand		EL: 0.2% CL: 0.5%	1VA	0~9999MVA
Power Factor		EL: 0.2% CL: 0.5%	0.001	-1.000~1.000
Frequency		0.1%	0.001Hz	45.00~65.00Hz
Energy	Primary 0.1	EL: 0.2% CL: 0.5%	0.1kWh	0-99999999.9kWh
	Primary 0.001	EL: 0.2% CL: 0.5%	0.001kWh	0-999999.999kWh
	Secondary	EL: 0.2% CL: 0.5%	0.001kWh	0-999999.999kWh
Reactive Energy	Primary 0.1	EL: 0.2% CL: 0.5%	0.1kvarh	0-99999999.9kvarh
	Primary 0.001	EL: 0.2% CL: 0.5%	0.001kvarh	0-999999.999kvarh
	Secondary	EL: 0.2% CL: 0.5%	0.001kvarh	0-999999.999kvarh
Apparent Energy	Primary 0.1	EL: 0.2% CL: 0.5%	0.1kVAh	0-99999999.9kVAh
	Primary 0.001	EL: 0.2% CL: 0.5%	0.001kVAh	0-999999.999kVAh
	Secondary	EL: 0.2% CL: 0.5%	0.001kVAh	0-999999.999kVaAh
Harmonics		1.0%	0.10%	
Phase Angle		2.0%	0.1°	0.0°~359.9°
Unbalance Factor		2.0%	0.10%	0.0%~100.0%
Running Time			0.01h	0~9999999.99h

I/O Options

DIGITAL INPUT	
Input Type	Dry
Input Resistance	100kΩ
Input Voltage Range	20~160 Vac/dc
Input Current (Max)	2mA
Start Voltage	15V
Stop Voltage	5V
Pulse Frequency (Max)	100Hz, 50% Duty Ratio (5ms ON and 5ms OFF)
SOE Resolution	2ms
DIGITAL OUTPUT *(DO) (PHOTO-MOS)*	
Voltage Range	0~250Vac/dc
Load Current	100mA (Max)
Output Frequency	25Hz, 50% Duty Ratio (20ms ON, 20ms OFF)
Isolation Voltage	2500Vac
RELAY OUTPUT *(RO) (NO, Form A)*	
Switching Voltage (Max)	250Vac, 30Vdc

Distributed by MicroDAQ, LLC
(603) 746-5524
www.microdaq.com

Load Current	5A(R), 2A(L)
Set Time	10ms (Max)
Contact Resistance	30mΩ (Max)
Isolation Voltage	2500Vac
Mechanical Life	$1.5x10^7$

ANALOG OUTPUT *(AO)*

Output Range	0~5V, 0~20mA; 1~5V, 4~20mA; Optional
Accuracy	0.50%
Temperature Drift	50ppm/°C Typical
Isolation Voltage	500Vdc
Open Circuit Voltage	15V

ANALOG INPUT *(AI)*

Input Range	0~5V, 0~20mA; 1~5V, 4~20mA; Optional
Accuracy	0.20%
Temperature Drift	50ppm/°C Typical
Isolation Voltage	500Vdc

POWER SUPPLY FOR DI *(24 VDC)*

Output Voltage	24Vdc
Output Current	42mA
Load (Max)	21 DIs

Communications

Modbus-RTU or BACnet MS/TP	Modbus-RTU 2-Wire Shielded Twisted Pair Cable Connection 2400~115200 bps
SECOND RS485 PORT *(OPTIONAL MODULE)*	Same as the primary RS485 port Baud Rate: 4800~38400 bps
ETHERNET *(OPTIONAL MODULE)*	Ethernet 10M/100M BaseT MODBUS-TCP/IP DNP 3.0 Over IP Level 2 IEC 61850 2nd Edition SNMP V3 BACnet-IP HTTP/HTTPs Webserver HTTP/HTTPs, FTP data post SMTP MQTT MV90 NTP
PROFIBUS *(OPTIONAL MODULE)*	PROFIBUS-DP/V0 Protocol Work as PROFIBUS Slave, Baud Rate Adaptive, up to 12M Model 1: Input Bytes: 32, Output Bytes: 32 Model 2: Input Bytes: 64, Output Bytes: 2 PROFIBUS Standard According to EN 50170 Vol. 2

Control Power

Universal	AC or DC

AC/DC CONTROL POWER

Operating Range	100~415Vac, 50/60Hz; 100~300Vdc
Burden	5W
Frequency	50/60Hz
Withstand	3250Vac, 50/60Hz for 1 minute
	Installation Category III (Distribution)

Distributed by MicroDAQ, LLC
(603) 746-5524
www.microdaq.com

LOW VOLTAGE DC CONTROL POWER *(OPTIONAL)*	
Operating Range	20~60Vdc
Burden	5W

Operating Environment	
Operating Temperature	-25°C to 70°C -13°F to 158°F
Storage Temperature	-40°C to 85°C -40°F to 176°F
Relative Humidity	5% to 95% Non-Condensing

Standard Compliance & Certifications	
Measurement Standard	IEC 62053-22; ANSI C12.20; IEC61557-12
Environmental Standard	IEC 60068-2, CE, RoHS
Safety Standard	IEC 61010-1, UL 61010-1
EMC Standard	IEC 61000-4/-2-3-4-5-6-8-11, CISPR 22, IEC 61000-3-2, IEC 61000-6-2/4, EN55011
Outlines Standard	DIN 43700, ANSI C39.1
Protocol Conformance	IEC 61850 2nd Edition BTL Listed for B-SA (Acuvim-CL, EL)

Appendix B Ordering Information

Meter Model	-	Mounting Option	-	Current Input	-	Power Supply
Acuvim-CL Energy class: 0.5 Harmonics up to 31st		**D**: LCD Display *(Panel Mount Meter/Transducer)*		**5A**: 5A/1A *(Input Field Selectable)*		**P1V3**: 100~415Vac, 50/60Hz, 100~300Vdc
Acuvim-EL Energy class: 0.2 Harmonics up to 63rd		**M**: DIN-Rail Mount Transducer without Display *(Optional Remote Display Available)*		**mV**: 333mV and Rogowski Coil *(Input Field Selectable)*		**P2V3**: 20~60Vdc

Ordering Example:	**Acuvim-CL-M-mV-P2V4**
	Acuvim-EL-D-5A-P1V4

Note:

1. Accuenergy suggests using USB-RS485 converter for configuration, and 3 CTs per three phase circuits.
2. All fields must be completed to create a part number.
3. Add "-S" after power supply for anti-tampering seal option.

Communication Module *(Optional)*	-	Protocols	
AXM		**WEB2-FOLC:**	IEC 61850, Modbus-TCP, HTTP/HTTPs Webserver, SMTP Email, SNMP, HTTP/HTTPs Push, FTP Post, sFTP Server, BACnet-IP, Datalogging, Wi-Fi, Fiber Optics LC, EtherNet/IP, MQTT, Google IoT
		WEB2:	IEC 61850, Modbus-TCP, HTTP/HTTPs Webserver, SMTP Email, SNMP, HTTP/HTTPs Push, FTP Post, sFTP Server, BACnet-IP, Datalogging, Wi-Fi, EtherNet/IP, MQTT, Google IoT
		PROFI:	PROFIBUS
		RS485:	Modbus-RTU
Ordering Example:			**AXM-RS485**

I/O Module *(Optional)*	-	Logic Module	-	Input/Output Type

Distributed by MicroDAQ, LLC
(603) 746-5524
www.microdaq.com

AXM-IO1	**1**	
	2	
Ordering Example:	**AXM-IO1-1**	
AXM-IO2	**1**	**A**: 4~20mA
AXM-IO3	**2**	**B**: 0~20mA
		C: 1~5V
		D: 0~5V
Ordering Example:	**AXM-IO3-1B**	

Accessories *(Optional)*

REM-DS2:	Remote Display *(Only for Acuvim-L DIN-Rail Mount "M" option)*
AXM-DIN:	DIN Rail Adapter
IP66/NEMA4X:	Environmental Protection Cover
USB-RS485:	USB-to-RS485 Converter
Ordering Example:	**AXM-DIN**

Note:

1. Refer to the Communication table and Communication table and I/O Module table from the Acuvim-L Datasheet.
2. A maximum of 3 modules may be attached to the meter. If a communication module is used (e.g. AXM-WEB2), it must be installed on the back FIRST before the other I/O modules are attached.
3. No more than 2 of the same I/O modules may be attached to the meter (e.g. two AXM-IO2). The same two I/O modules must have a different logic number.

Distributed by MicroDAQ, LLC
(603) 746-5524
www.microdaq.com

MAKE ENERGY USAGE SMARTER

Accuenergy Inc.
Los Angeles - Toronto - Pretoria
North America Toll Free: 1-877-721-8908
Web: www.accuenergy.com
Email: marketing@accuenergy.com

Revised: December 2023 V: 4.00
Specs Subject To Change Without Notice.

ISO9001 Certified

Distributed by MicroDAQ, LLC
(603) 746-5524
www.microdaq.com